BALDOR
A MEMBER OF THE ABB GROUP

BALDOR • RELIANCE

Product Information Packet

ELECTRIC MOTOR WHOLESALE.COM

EM7041T-I

2//1.5HP,1175//975 75C RISERPM,3PH,60//5

Copyright © All product information within this document is subject to Baldor Electric Company copyright © protection, unless otherwise noted.

Part Detail

Revision:	K	**Status:**	PRD/A	**Change #:**		**Proprietary:**	No
Type:	AC	**Elec. Spec:**	36WGS917	**CD Diagram:**	CD0005	**Mfg Plant:**	
Mech. Spec:	36J694	**Layout:**	36LYJ694	**Poles:**	06	**Created Date:**	06-04-2012
Base:	RG	**Eff. Date:**	05-23-2017	**Leads:**	9#16		

Specs

Catalog Number:	EM7041T-I	**Front Face Code:**	Standard
Enclosure:	XPFC	**Front Shaft Indicator:**	None
Frame:	184T	**Heater Indicator:**	No Heater
Frame Material:	Steel	**Insulation Class:**	F
Output @ Frequency:	2.000 HP @ 60 HZ	**Inverter Code:**	Not Inverter
	1.500 HP @ 50 HZ	**KVA Code:**	M
Synchronous Speed @ Frequency:	1000 RPM @ 50 HZ	**Lifting Lugs:**	No Lifting Lugs
Voltage @ Frequency:	230.0 V @ 60 HZ	**Locked Bearing Indicator:**	No Locked Bearing
	190.0 V @ 50 HZ	**Motor Lead Quantity/Wire Size:**	9 @ 16 AWG
	460.0 V @ 60 HZ	**Motor Lead Exit:**	Ko Box
	380.0 V @ 50 HZ	**Motor Lead Termination:**	Flying Leads
XP Class and Group:	CLI GP C,D	**Motor Type:**	3644M
XP Division:	Division I	**Mounting Arrangement:**	F1
Agency Approvals:	UR	**Power Factor:**	60
	UL	**Product Family:**	General Purpose
	CSA EEV	**Pulley End Bearing Type:**	Sealed Bearing
	CSA	**Pulley Face Code:**	Standard
Auxillary Box:	No Auxillary Box	**Pulley Shaft Indicator:**	Standard

Auxillary Box Lead Termination:	None
Base Indicator:	Rigid
Bearing Grease Type:	Polyrex EM (-20F +300F)
Blower:	None
Current @ Voltage:	7.000 A @ 230.0 V
	7.000 A @ 208.0 V
	6.600 A @ 190.0 V
	3.500 A @ 460.0 V
	3.300 A @ 380.0 V
Design Code:	A
Drip Cover:	No Drip Cover
Duty Rating:	CONT
Electrically Isolated Bearing:	Not Electrically Isolated
Feedback Device:	NO FEEDBACK

Rodent Screen:	None
RoHS Status:	ROHS COMPLIANT
Shaft Extension Location:	Pulley End
Shaft Ground Indicator:	No Shaft Grounding
Shaft Rotation:	Reversible
Shaft Slinger Indicator:	No Slinger
Speed Code:	Single Speed
Motor Standards:	NEMA
Starting Method:	Direct on line
Thermal Device - Bearing:	None
Thermal Device - Winding:	Normally Closed Thermostat
Vibration Sensor Indicator:	No Vibration Sensor
Winding Thermal 1:	None
Winding Thermal 2:	None
XP Temp Code:	T3C

Nameplate NP0977XPSLEV

NO.				CC	010A		
SER.				TEMP CODE	T3C		
SPEC.	36J694S917G1						
CAT.NO.	EM7041T-I						
HP	2//1.5						
VOLTS	230/460//190/380						
AMPS	7/3.5//6.6/3.3						
RPM	1175//975 75C RISE			MOTOR WEIGHT	119		
HERTZ	60//50	PH	3	CL	F	DE BRG	6206
SER.F.	1.15	DES	A	CODE	M	ODE BRG	6205
FRAME	184T	GREASE	POLYREX EM				
RATING	40C AMB-CONT						
USABLE AT 208V	7	NEMA-NOM-EFF	88.5	PF	60		
	55C AMB AT 1.0 SF						

BALDOR A MEMBER OF THE ABB GROUP

Parts List

Part Number	Description	Quantity
SA246217	SA 36J694S917G1	1.000 EA
RA233103	RA 36J694S917G1	1.000 EA
36FN3000B01	EXFN, PLASTIC, 6.00 OD, .912 ID	1.000 EA
35CB1005A01	CONDUIT BOX,MACH - GROUP "C" MTRS	1.000 EA
06EP1709A05	FRONT XPFC 205 BRG GRP C W/ DRAIN (HW450	1.000 EA
HW4500A19	1/4-28X1/4 SLOTTED PLUG F/S	2.000 EA
HW4506A02	BREATHER/DRAIN-EXP PROOF-.125-27 NPTF AI	1.000 EA
HW3022E05	.125 DIA X .500 ROLLED SPRING PIN	1.000 EA
HW5100A05	WVY WSHR F/205 & 304 BRGS	1.000 EA
36EP1718A03	36 PU EP XPFC 206 BRG W/METAL SLINGER	1.000 EA
HW4500A19	1/4-28X1/4 SLOTTED PLUG F/S	2.000 EA
HW4506A02	BREATHER/DRAIN-EXP PROOF-.125-27 NPTF AI	1.000 EA
HW3022E05	.125 DIA X .500 ROLLED SPRING PIN	1.000 EA
XY3816A12	3/8-16 FINISHED NUT	4.000 EA
36FH3003A05	FAN COVER XP W/(2) GRSR HOLES, DRAIN	1.000 EA
51XN1032A08	10-32 X 0.500 HX WS SL SR ZN	4.000 EA
35CB1501A01	CONDUIT BOX LID, MACH. - GROUP "C"MTRS	1.000 EA
RM1020A41	O-RING, -150 BUNA-N, .103 CS X 2.862 ID	1.000 EA
HA2065A01	SLINGER, ALUM (AUTO)	1.000 EA
80XN1032A07	SET SCREW, HEX XOCK, ZN	1.000 EA
HW2501E16	KEY, 1/4 SQ X 1.750	1.000 EA
HA7000A02	KEY RETAINER RING, 1 1/8 DIA, 1 3/8 DIA	1.000 EA
85XU0407S04	4X1/4 U DRIVE PIN STAINLESS	6.000 EA
LB1359F	ALUM XP CAUTION LABEL	1.000 EA

BALDOR
A MEMBER OF THE ABB GROUP

Parts List (continued)

Part Number	Description	Quantity
MJ1000A02	GREASE, POLYREX EM EXXON (USe 4824-15A)	0.050 LB
51XB1214A16	12-14X1.00 HXWSSLD SERTYB	1.000 EA
MG1025G29	WILKOFAST, 789.229, DARK CHARCOAL GRAY	0.022 GA
HA3105A18	THRUBOLT- 3/8-16 X 13.375 X	4.000 EA
LB1119N	WARNING LABEL	1.000 EA
LC0145B01	CONNECTION LABEL	1.000 EA
MN416A01	TAG-INSTAL-MAINT no wire (1100/bx) 11/14	1.000 EA
NP0977XPSLEV	SS XP UL CSA-EEV CC CL-I GP-C&D	1.000 EA
G0PA1000	PKG GRP, PRINT PK1026A06	1.000 EA

BALDOR
A MEMBER OF THE ABB GROUP

AC Induction Motor Performance Data

Record # 38672 - Typical performance - not guaranteed values

Winding: 36WGS917-R003	**Type:** 3644M	**Enclosure:** XPFC

Nameplate Data				460 V, 60 Hz: High Voltage Connection	
Rated Output (HP)	2//1.5			Full Load Torque	8.91 LB-FT
Volts	230/460//190/380			Start Configuration	direct on line
Full Load Amps	7/3.5//6.6/3.3			Breakdown Torque	40.2 LB-FT
R.P.M.	1175//975			Pull-up Torque	21.6 LB-FT
Hz	60//50	Phase	3	Locked-rotor Torque	28.2 LB-FT
NEMA Design Code	A	KVA Code	M	Starting Current	27.5 A
Service Factor (S.F.)	1.15			No-load Current	2.45 A
NEMA Nom. Eff.	88.5	Power Factor	60	Line-line Res. @ 25ºC	4.2188 Ω
Rating - Duty	40C AMB-CONT			Temp. Rise @ Rated Load	34°C
S.F. Amps				Temp. Rise @ S.F. Load	39°C

Load Characteristics 460 V, 60 Hz, 2 HP

% of Rated Load	25	50	75	100	125	150	S.F.
Power Factor	24	40	52	60	66	70	64
Efficiency	76.4	85.3	88	88.9	88.8	88.4	88.8
Speed	1196.9	1191.4	1185.5	1179.4	1172.7	1165.5	1175
Line amperes	2.53	2.76	3.09	3.49	3.97	4.52	3.78

Performance Graph at 460V, 60Hz, 2.0HP Typical performance - Not guaranteed values

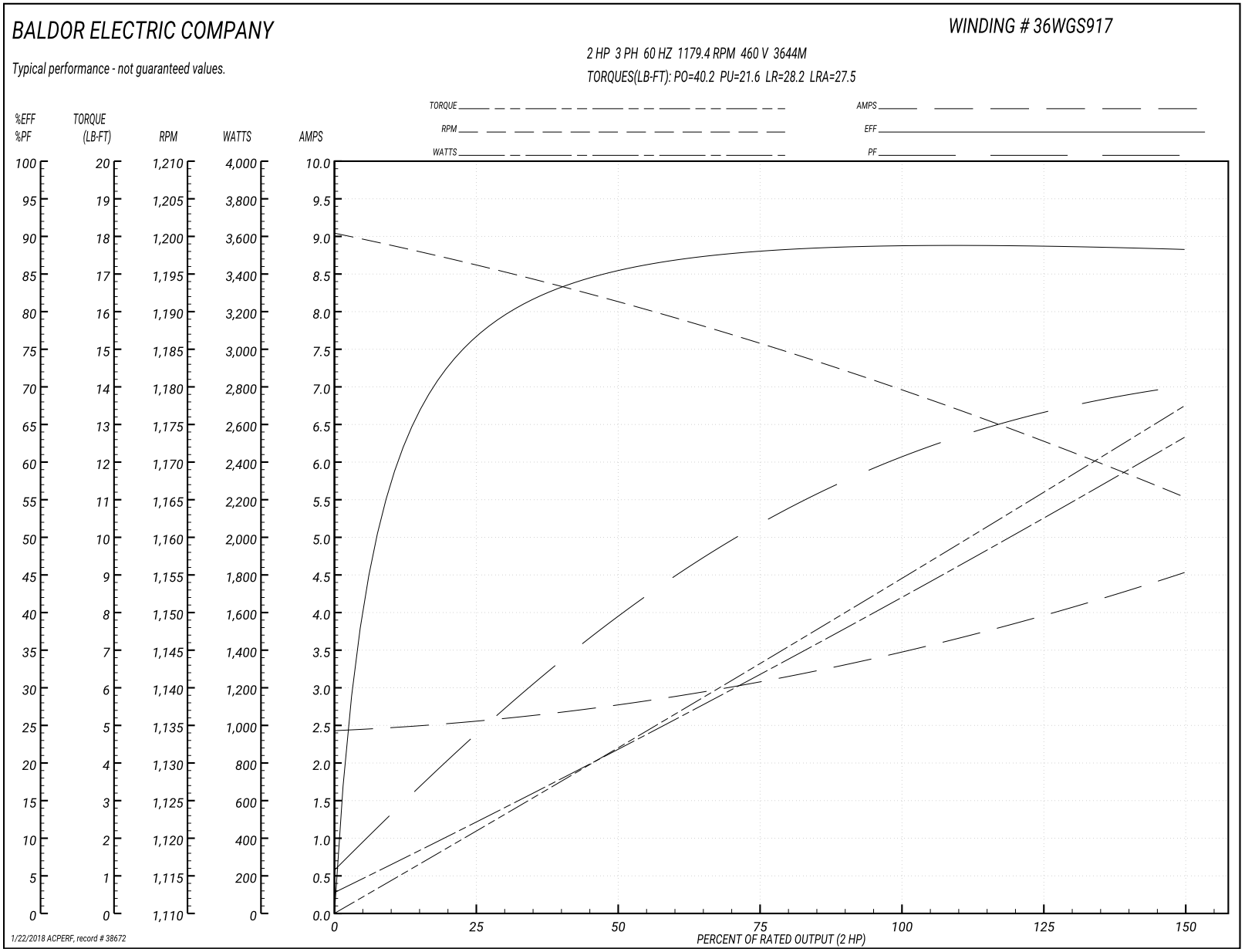

BALDOR
A MEMBER OF THE ABB GROUP

36LYJ694

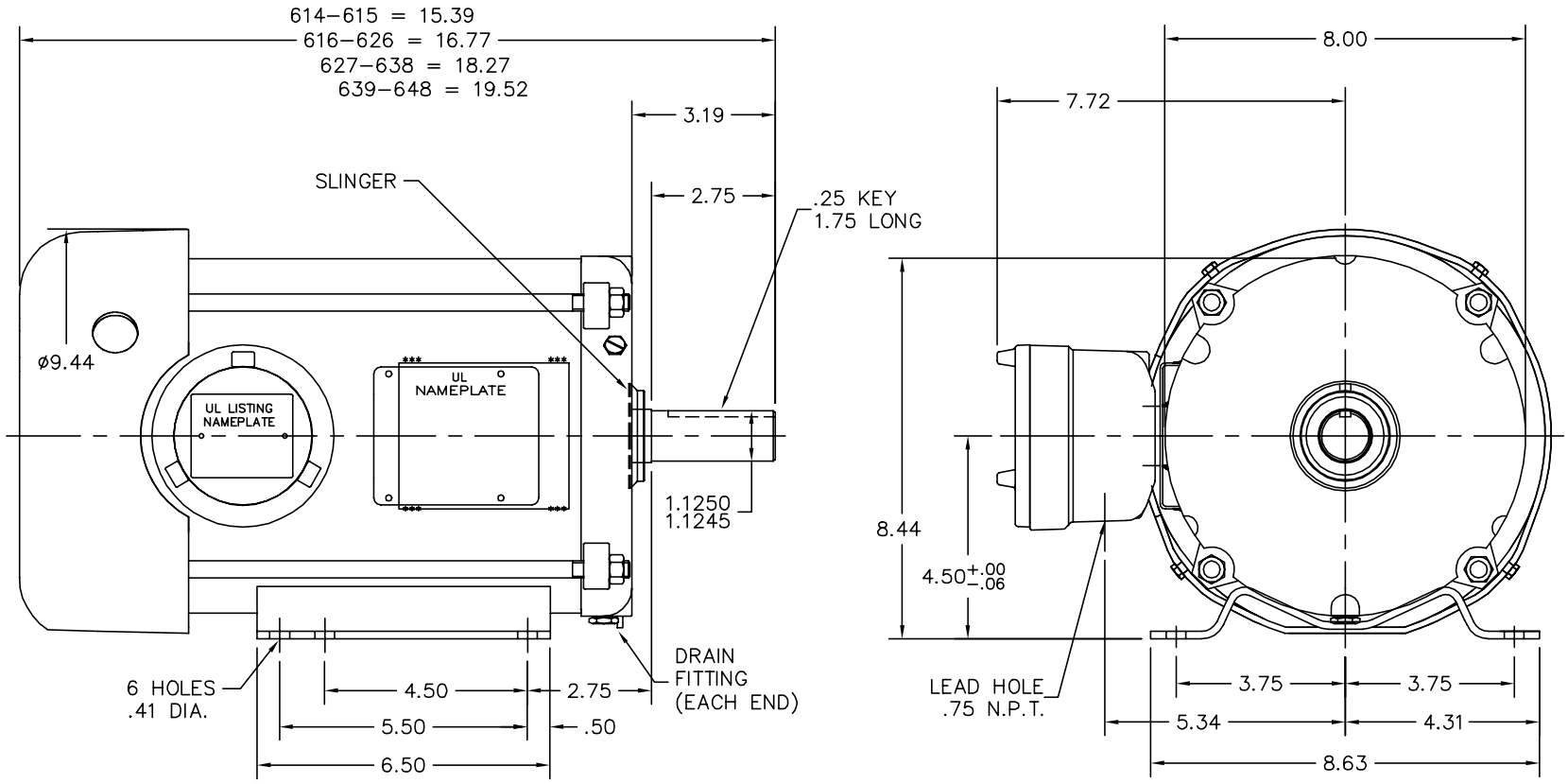

CUSTOMER IS RESPONSIBLE FOR DETERMINING THAT MOTOR PERFORMANCE IS SUITABLE IN THE APPLICATION.

REV. DESC: CHG 36EP1718A10 TO A03			BALDOR ELECTRIC Co.
REV. LTR: G	BY: JF	REVISED: 06:38:01 10/27/2004	TDR: 345569
36LYJ694		FILE: AAA00076220	REF: 36LYJ694
		MTL: –	HORZ 182–4T XPFC 36M CLI GP C&D DRILL RIG

36LYJ694

BALDOR A MEMBER OF THE ABB GROUP

CD0005

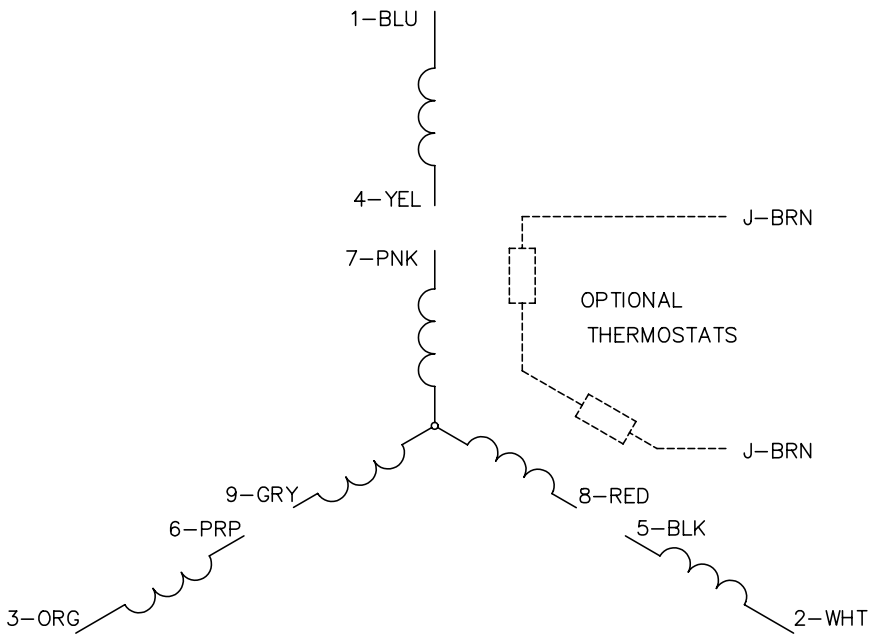

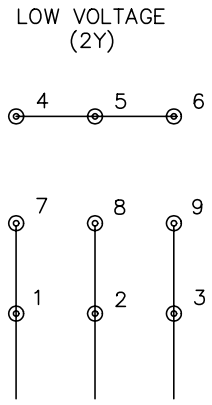

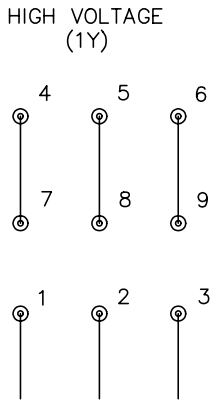

NOTES:

1. INTERCHANGE ANY TWO LINE LEADS TO REVERSE ROTATION.
2. OPTIONAL THERMOSTATS ARE PROVIDED WHEN SPECIFIED.
3. ACTUAL NUMBER OF INTERNAL PARALLEL CIRCUITS MAY BE A MULTIPLE OF THOSE SHOWN ABOVE.
4. LEAD COLORS ARE OPTIONAL. LEADS MUST ALWAYS BE NUMBERED AS SHOWN.

CD0005

REV. DESC: REVISE TO SHOW OPTIONAL COLORS			BALDOR ELECTRIC Co.
REV. LTR: E	BY: JLP	REVISED: 01/19/99 10:15	TDR: 0171435
CD0005		FILE: AAA00005140	MDL: –
		MTL: –	3PH, DV, 9 LEADS

BALDOR A MEMBER OF THE ABB GROUP