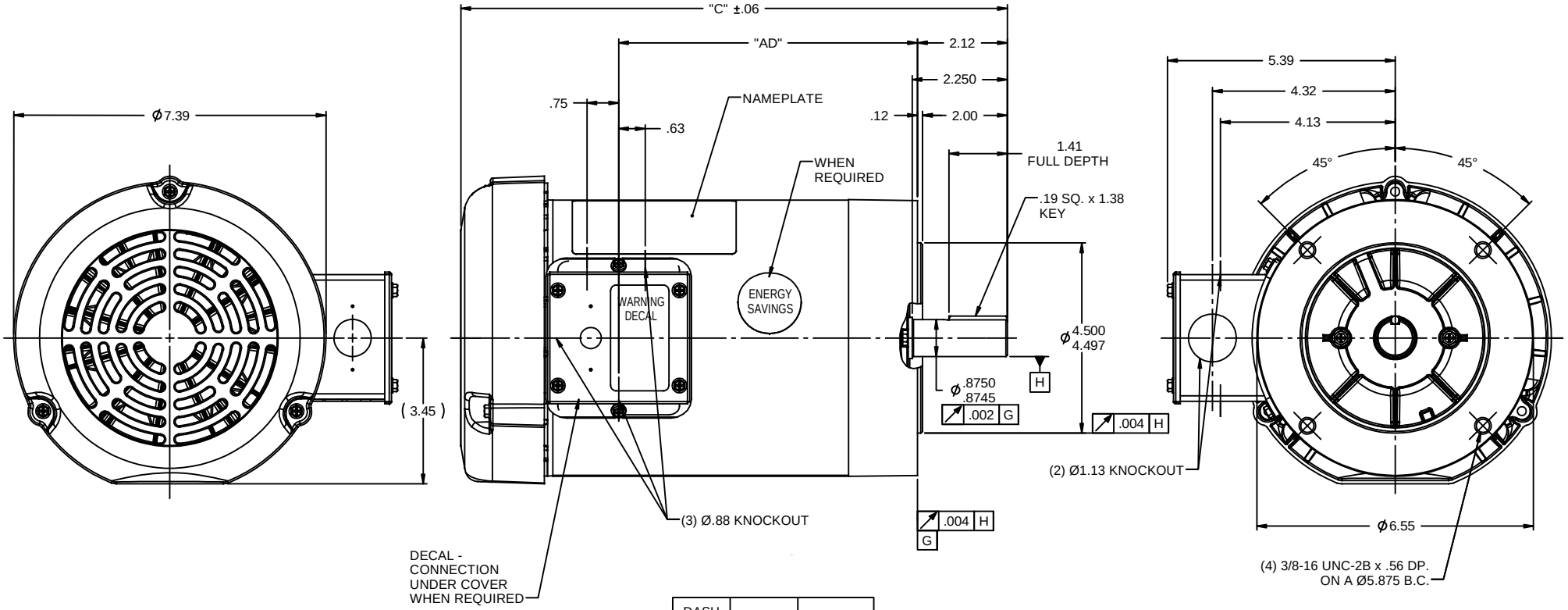

DASH NO.	"C"	"AD"
550	11.42	5.56
600	11.92	6.06
650	12.42	6.56
675	12.67	6.81
700	12.92	7.06
750	13.42	7.56
800	13.92	8.06

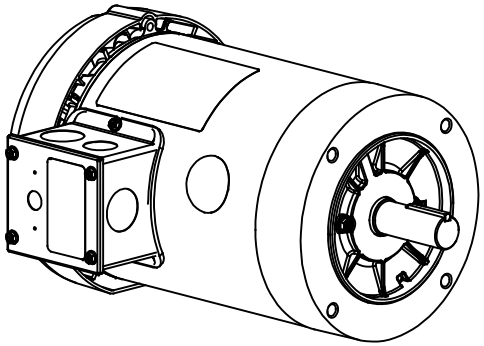

NOTE:
1) GASKETS THROUGHOUT

NO	REVISION	BY & DATE	CHK
05	ADDED FAN GUARD DIMENSIONS PER SALES	PG 1/5/2011	
04	ADDED DASH NO. 675	PG 5/21/2010	
03	ADDED ENERGY SAVINGS DECAL	PG 5/19/2010	
02	ADD "C" DIM. PER ISAAC 09-4157	LST 10/1/2009	
01	REVISED GD&T POSITIONING & CALLOUT	KMM 8/27/07	

TOLERANCES UNLESS SPECIFIED

DEC	INCHES
.X	±.1
.XX	±.03
.XXX	±.005
.XXXX	±.0005
ANG	±1/2°

LEESON ELECTRIC MOTORS GEARMOTORS AND DRIVES

TITLE OUTLINE - 140TC FRAME
TEFC - "C" FACE

MAT'L
FINISH GENERAL PURPOSE

DRAWN KMM 08/02/07
CHK
APPR
SCALE 7:16
REF 028504.00
FMF 120038.00
PAGE OF

THIRD ANGLE PROJECTION

RFP
PREV
NETWORK FILE NAME 028777

SIZE B
DRAWING NO 028777
REV 05