RBC PROPRIETARY AND CONFIDENTIAL INFORMATION
This document is the property of REGAL BELOIT CORPORATION ("RBC") including its subsidiaries and divisions and contains proprietary information of RBC. This document is loaned on the express condition that neither it nor the information contained therein shall be disclosed to others without the express written consent of RBC, and that the information shall be used by the recipient only as approved expressly by RBC. This document shall be returned to RBC upon its request. This document may be subject to certain restrictions under U.S. export control laws and regulations.

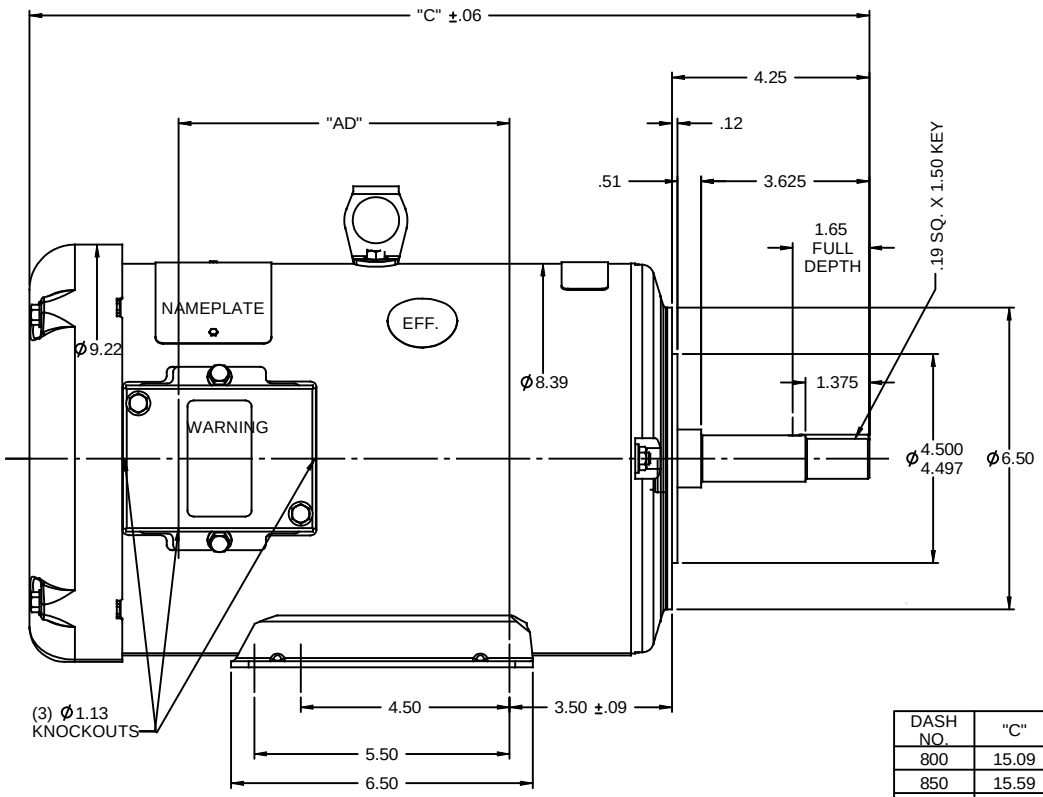

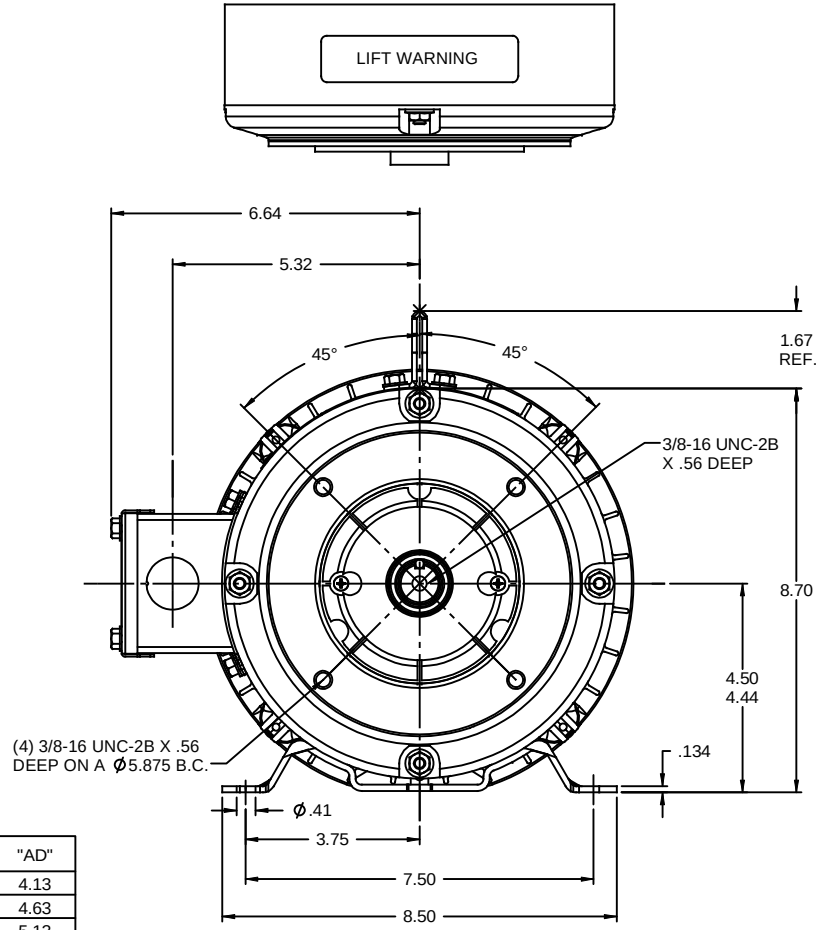

DASH NO.	"C"	"AD"
800	15.09	4.13
850	15.59	4.63
900	16.09	5.13
950	16.59	5.63
1000	17.09	6.13
1050	17.59	6.63
1100	18.09	7.13
1150	18.59	7.63

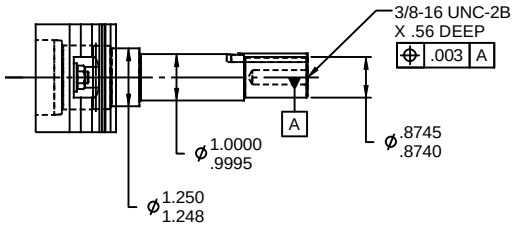

SHAFT DETAIL

GASKETS THROUGHOUT
MAXIMUM FACE RUNOUT TO BE .004 T.I.R.
MAXIMUM PILOT ECCENTRICITY TO BE .004 T.I.R.
PERMISSIBLE SHAFT RUNOUT TO BE .002 T.I.R.

NO	REVISION	BY & DATE	CHK
-	UPDATED & REDRAWN ON SOLIDWORKS	LST 12/8/2009	XX

TOLERANCES UNLESS SPECIFIED

DEC	INCHES
.X	±.1
.XX	±.03
.XXX	±.005
.XXXX	±.0005
ANG	±1/2°

REGAL-BELOIT CORPORATION

TITLE OUTLINE - 180JM FRAME
TEFC - "JM" PUMP MOUNT

MAT'L
FINISH
RFP
PREV
NETWORK FILE NAME

THIRD ANGLE PROJECTION

DRAWN	PG 9/15/97
CHK	RK 9/15/97
APPR	
SCALE	3:8
REF	035199
FMF	
PAGE	OF
SIZE	B
DRAWING NO	035357
REV	-

12/8/2009 10:46:56 AM