SS86629LE

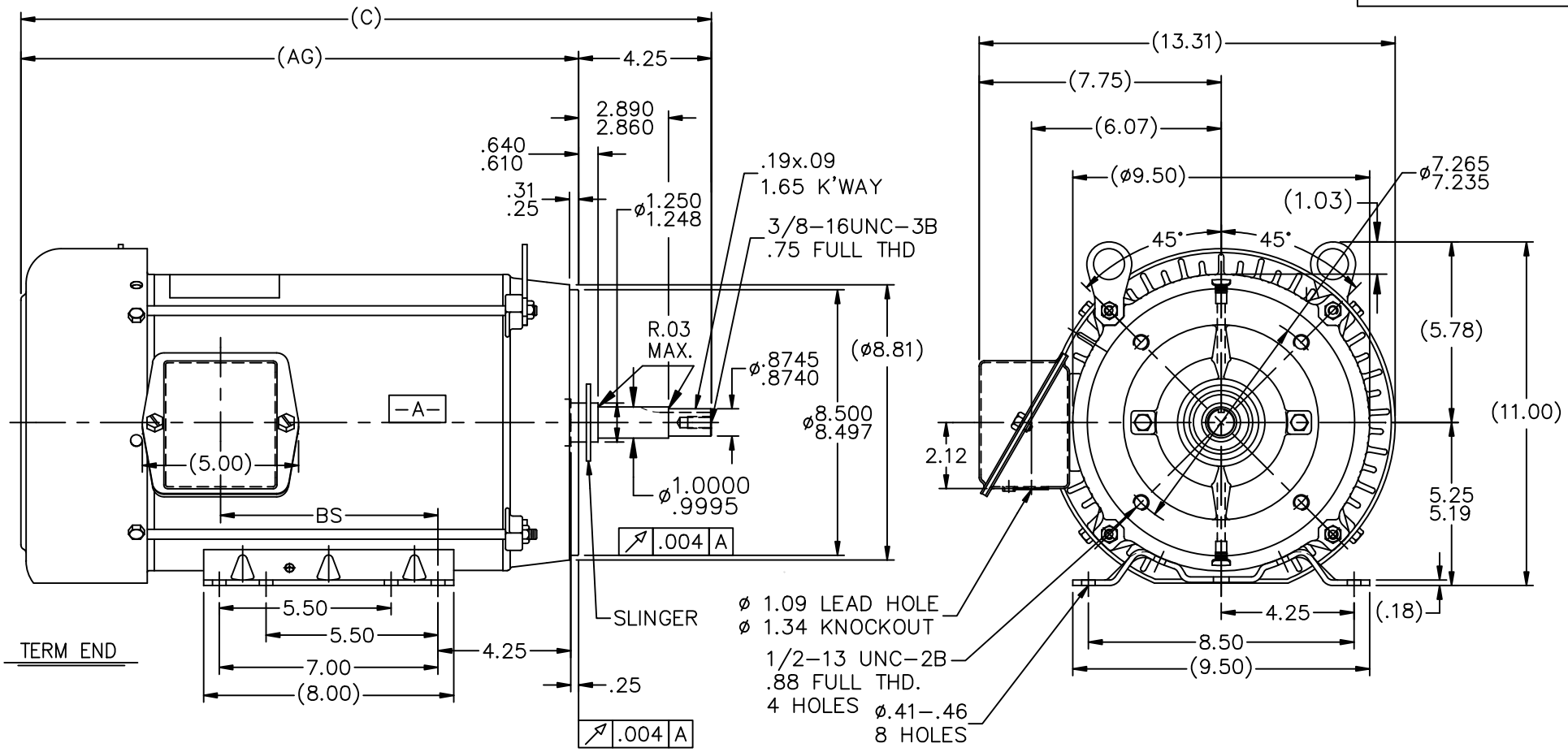

DASH	FR.	C	AG	BS	MOUNTING
965	213T	20.59	16.34	5.43	
1115	213/15T	22.09	17.84	6.93	
1240	213/15T	23.34	19.09	8.18	F1 ONLY

NOTES:
1. NAMEPLATE TO BE READ FROM C'BOX SIDE OF MOTOR.
2. BOX CAN BE MOUNTED IN 90° STEPS.
3. BOX CON BE MOUNTED ON OPPOSITE SIDE BY REMOVING BRACKETS AND TURNING FRAME 180°. (EXCEPT AS NOTED.)

NO.	REVISION	BY & DATE	CHK

TOLERANCES UNLESS SPECIFIED

DEC.	INCHES
.X	±.1
.XX	±.03
.XXX	±.005
.XXXX	±.0005
ANG	±7'30"

LEESON — ELECTRIC MOTORS GEARMOTORS AND DRIVES

TITLE OUTLINE
210T JM–BB–TS–TEFC–R/S–C' FACE

MAT'L.
FINISH

DRAWN	AK 12/13/2010
CHK	ST 12/13/2010
APPD	AK 12/13/2010
SCALE	1=5
REF	
FMF	
PREV	

THIS DRAWING IN DESIGN AND DETAIL IS OUR PROPERTY AND MUST NOT BE USED EXCEPT IN CONNECTION WITH OUR WORK ALL RIGHTS OF DESIGN AND INVENTION ARE RESERVED
THIS IS AN ELECTRONICALLY GENERATED DOCUMENT – DO NOT SCALE THIS PRINT

RFP
DIST LB
CAD FILE ss86629LE
SIZE A
DRAWING NO. SS86629LE
PAGE OF
REV.

12/13/2010 5:20:22 AM