169534-60

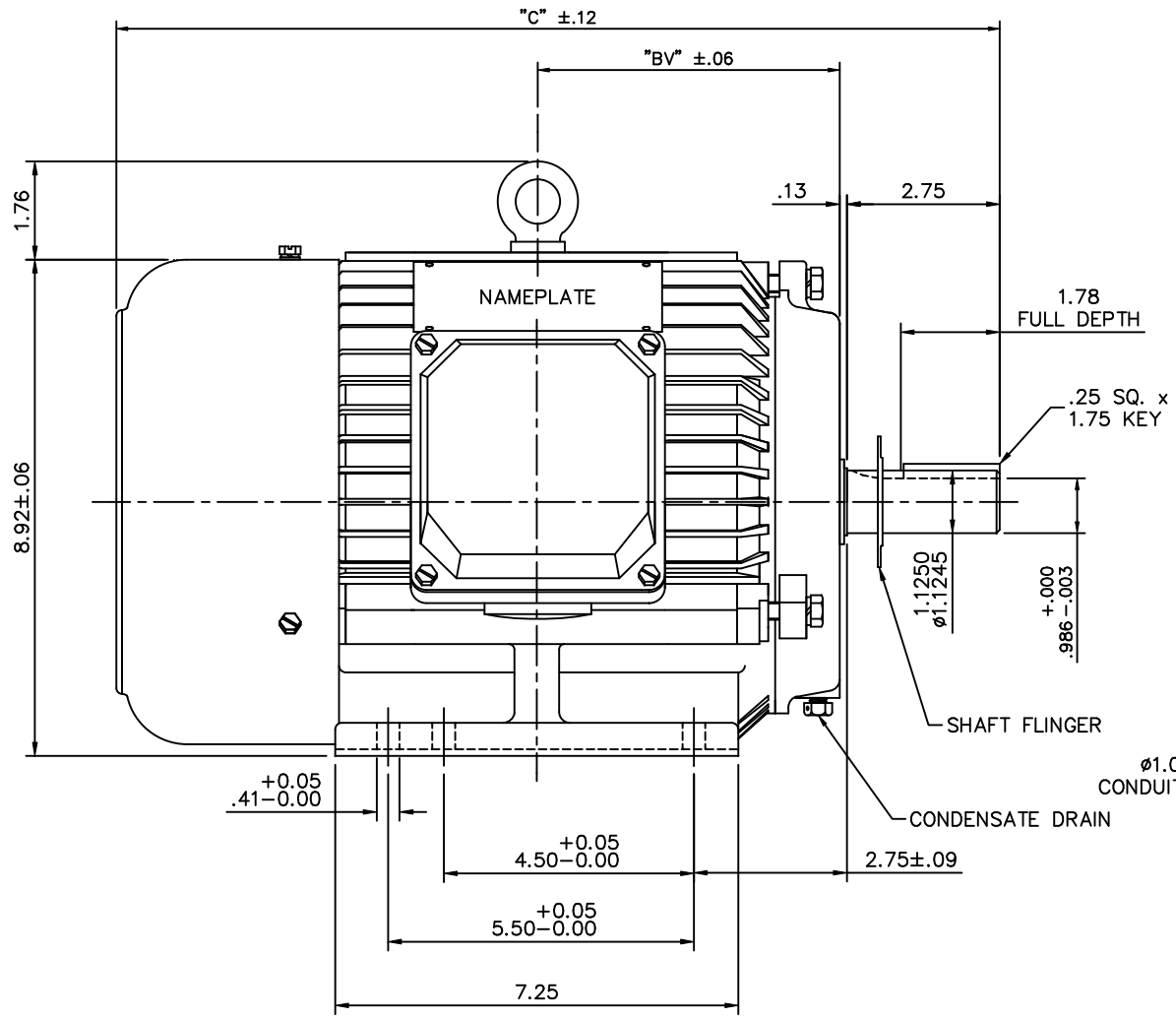

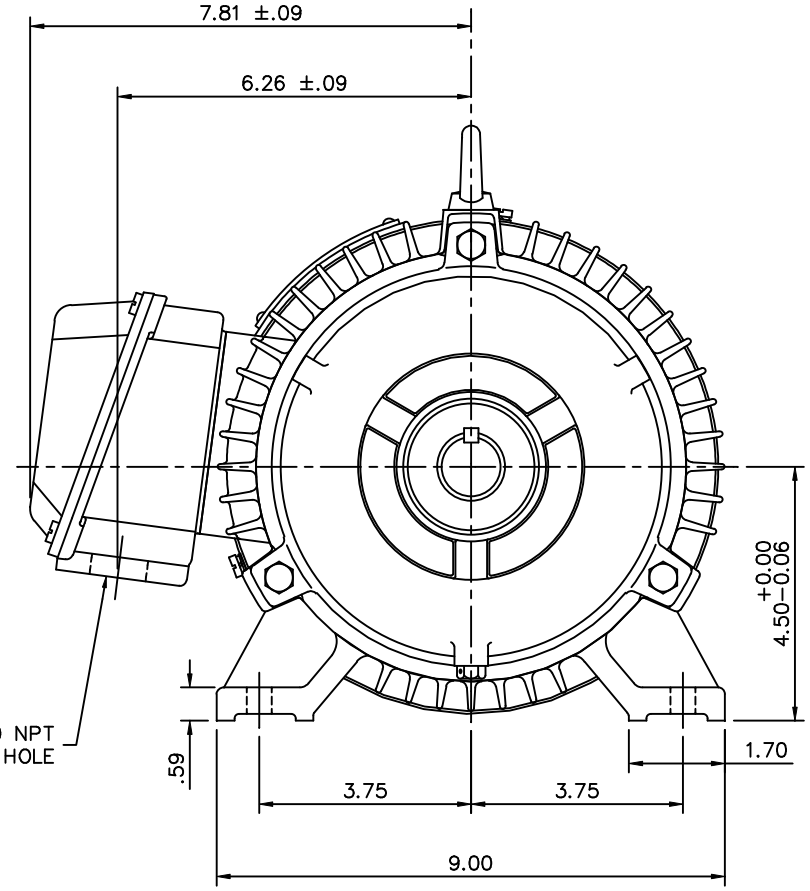

NOTE: 184T HAS 6 MTG. HOLES, USING BOTH 182T AND 184T "2F" LOCATIONS.

FRAME	"C"	"BV"
182T	16.14	5.38
184T	16.80	5.88

NO.	REVISION	BY & DATE
02	REDRAWN TO CURRENT CAD STANDARDS	CJK 11/14/01
01	REDRAWN WITH CURRENT STANDARDS TO CAD	D.R.Z.2/15/01

TOLERANCES UNLESS SPECIFIED

DEC.	INCHES
.X	±.1
.XX	±.03
.XXX	±.005
.XXXX	±.0005
ANG	±1/2°

CHK

LEESON — ELECTRIC MOTORS GEARMOTORS AND DRIVES

TITLE: OUTLINE – 182T & 184T FRAME RIGID – TEFC NEW CON-BOX

MAT'L.: CAST IRON

FINISH

CAD FILE: 16953460

RFP

DIST

SIZE: B

DRAWING NO.: 169534-60

REV.: 02

DRAWN J.J.K. 03/25/99

CHK

APPD P.G. 03/31/99

SCALE 7=16

REF 169500

FMF

PREV

THIS DRAWING IN DESIGN AND DETAIL IS OUR PROPERTY AND MUST NOT BE USED EXCEPT IN CONNECTION WITH OUR WORK ALL RIGHTS OF DESIGN AND INVENTION ARE RESERVED
THIS IS AN ELECTRONICALLY GENERATED DOCUMENT – DO NOT SCALE THIS PRINT