169916

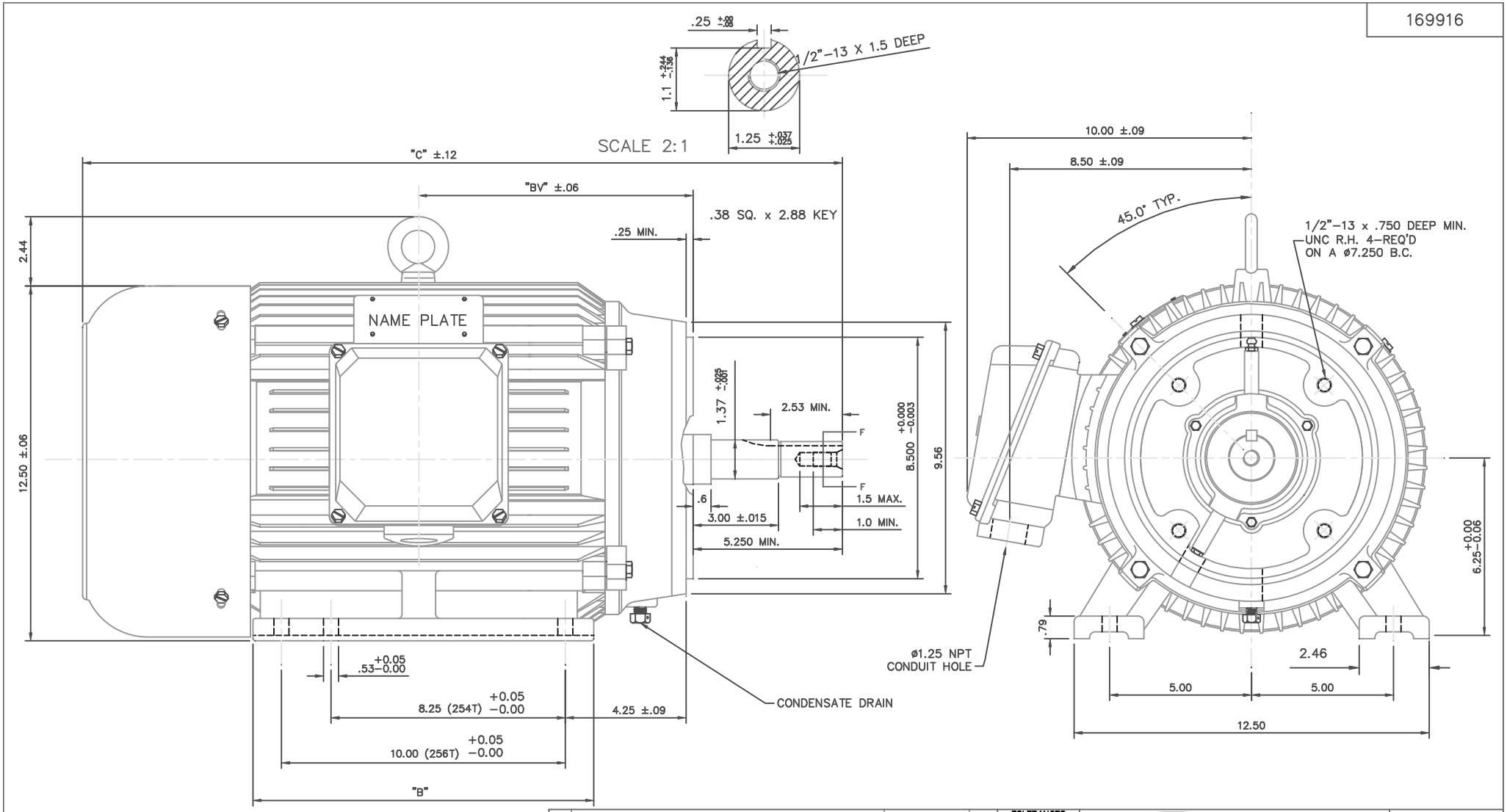

NOTE: 256T HAS 6 MTG. HOLES, USING BOTH 254T AND 256T "2F" LOCATIONS.

FRAME	"C"	"B"	"BV"
254T	23.80	10.25	9.16
256T	25.50	12.00	10.01

NO.	REVISION	BY & DATE	CHK
01	REDRAWN TO CURRENT CAD STANDARDS	CJK 8/6/01	

TOLERANCES UNLESS SPECIFIED	
DEC.	METRIC
.X	±2.5
.XX	±.76
.XXX	±.127
.XXXX	±.0127
ANG	±1/2°

LEESON ELECTRIC MOTORS GEARMOTORS AND DRIVES

TITLE: OUTLINE – 250T FRAME RIGID, "C"–FACE, NEW CON–BOX

MAT'L.: CAST IRON

FINISH

CAD FILE: 16991600

RFP

DIST

DRAWN: DRZ 05/23/01

CHK

APPD

SCALE: 5=16

REF

FMF

PREV

SIZE: B

DRAWING NO.: 169916

REV.: 01

THIS DRAWING IN DESIGN AND DETAIL IS OUR PROPERTY AND MUST NOT BE USED EXCEPT IN CONNECTION WITH OUR WORK ALL RIGHTS OF DESIGN AND INVENTION ARE RESERVED
THIS IS AN ELECTRONICALLY GENERATED DOCUMENT – DO NOT SCALE THIS PRINT