B-SS203628LN

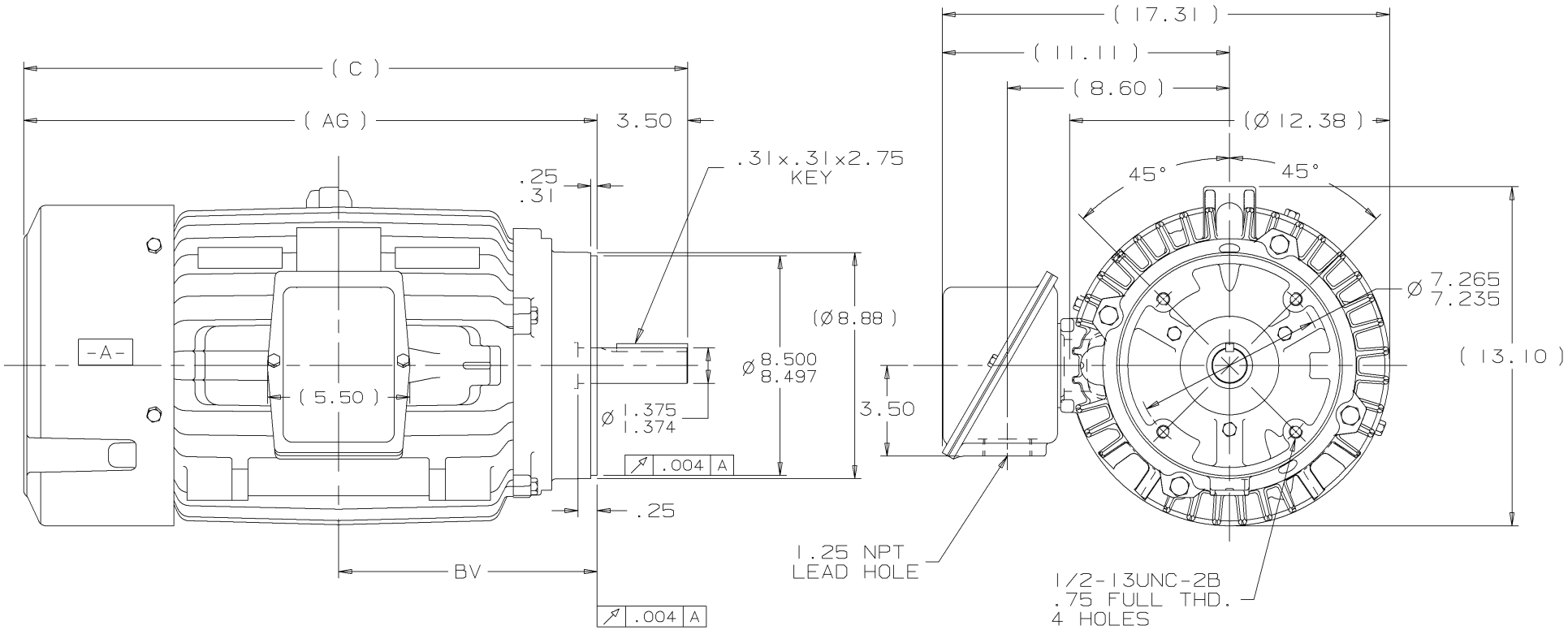

NOTES:
1. BOX CAN ONLY BE ROTATED CLOCKWISE UP TO 270° FROM ITS ORIGINAL POSITION.
2. NAMEPLATE TO BE READ FROM CONDUIT BOX SIDE OF MOTOR

DASH	FRAME	C	AG	BV		
1175	254UC	23.94	20.44	9.12		
1350	254UC	25.69	22.19	10.00		

REV	DATE	CHANGE	NAME
2	02-21-2001	REVISED C'BOX TO CAST IRON MU35803	DAH
1	02-21-2001	NEW DRAWING MU35803	DAH

Lincoln MOTORS

UNLESS OTHERWISE SPECIFIED DIMENSIONS ARE IN INCHES
TOL. ON XX± .03 XXX± .005 XXXX± .0005 ANGLES± 7'30"

MAX. SURFACE ROUGHNESS UNLESS OTHERWISE NOTED
FINISH
MATERIAL

DRAWN BY	DAH	02-15-2001
CHKD BY	ML	02-16-2001
APPD BY	BW	02-16-2001

PART NAME OUTLINE - TEFC
250UC FRAME - BB - TS - STD. - 'C' FACE

DRWG NO B- SS203628LN

PURCHASED | DISTRIBUTION WA - LB - WP - LN - BY | CADD FILE NO. SS203628LN