A- SS88397LN

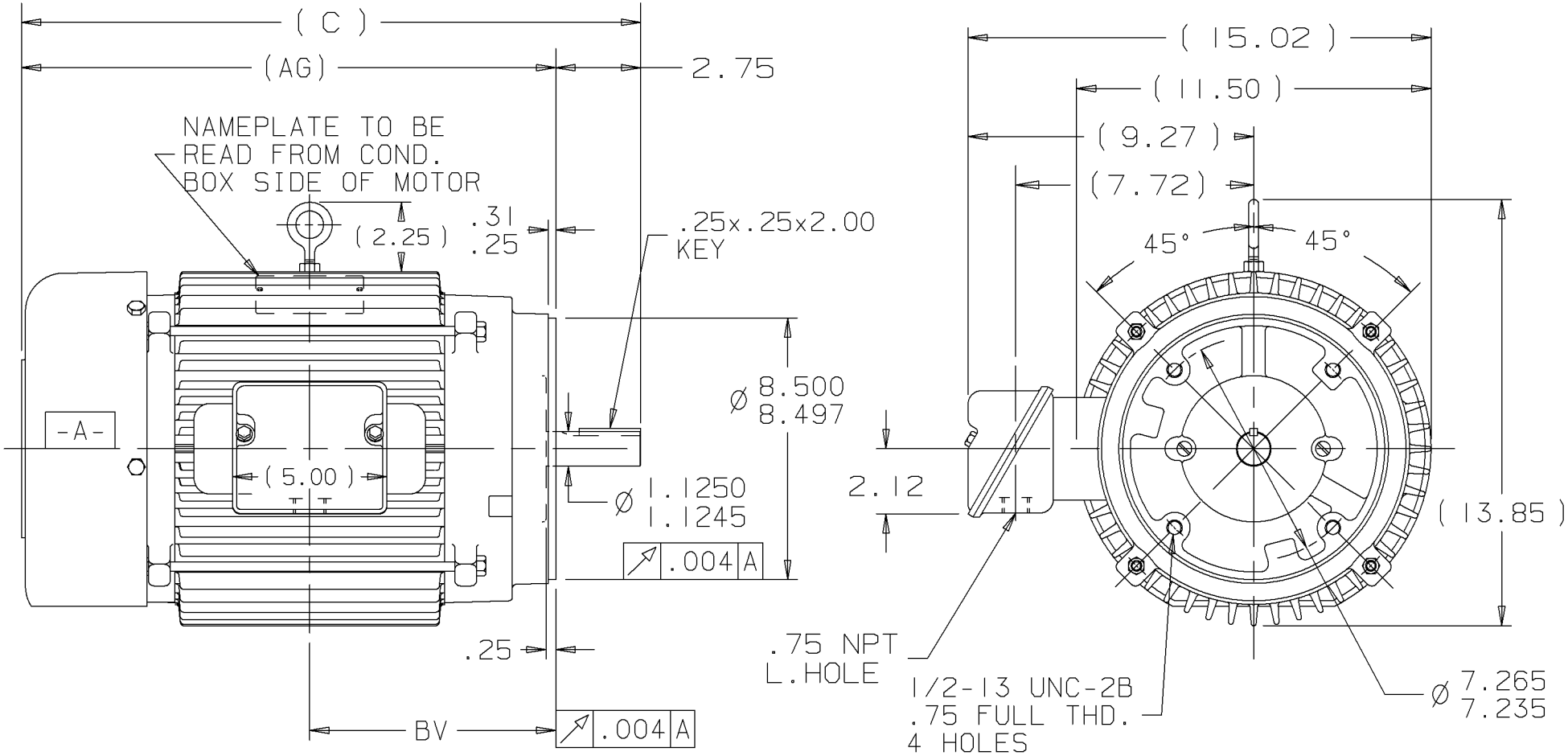

DASH	FR.	C	AG	BV		
725	213T	18.58	15.83	7.25		
875	215T	20.08	17.33	8.00		

NOTES:
BOX CAN BE ROTATED IN 90° STEPS.
BOX CAN BE MOUNTED ON OPPOSITE SIDE BY
REMOVING BRACKETS AND TURNING FRAME 180°

REV	DATE	CHANGE	NAME
1	02-15-2001	NEW DRAWING MU35802	DAH

Lincoln MOTORS

UNLESS OTHERWISE SPECIFIED DIMENSIONS ARE IN INCHES
TOL. ON XX± .03 XXX± .005 XXXX± .0005 ANGLES± 7'30"

MAX. SURFACE ROUGHNESS UNLESS OTHERWISE NOTED

FINISH

MATERIAL

DRAWN BY DAH	02-12-2001
CHKD BY ML	02-14-2001
APPD BY DR	02-15-2001

PART NAME OUTLINE
210UC FRAME - TEFC

DRWG NO A- SS88397LN

PURCHASED | CADD FILE NO. SS88397LN

9/5/2007 6:37:40 AM -