BALDOR
A MEMBER OF THE ABB GROUP

BALDOR • RELIANCE

Product Information Packet

ELECTRIC MOTOR WHOLESALE.COM

VHM2513T

15HP,1760RPM,3PH,60HZ,254HP,0938M,OPEN

Copyright © All product information within this document is subject to Baldor Electric Company copyright © protection, unless otherwise noted.

Part Detail							
Revision:	M	**Status:**	PRD/A	**Change #:**		**Proprietary:**	No
Type:	AC	**Prod. Type:**	0938M	**Elec. Spec:**	09WGX661	**CD Diagram:**	
Enclosure:	OPEN	**Mfg Plant:**		**Mech. Spec:**	09G506	**Layout:**	
Frame:	254HP	**Mounting:**	F1	**Poles:**	04	**Created Date:**	
Base:	N	**Rotation:**	R	**Insulation:**	F	**Eff. Date:**	12-08-2011
Leads:	9#12	**Literature:**		**Elec. Diagram:**		**Replaced By:**	

Nameplate NP1256L								
CAT.NO.	VHM2513T							
SPEC.	09G506X661G1							
HP	15							
VOLTS	208-230/460							
AMP	39-36.2/18.1							
RPM	1760							
FRAME	254HP	**HZ**	60	**PH**	3			
SER.F.	1.15	**CODE**	H	**DES**	B	**CLASS**	F	
NEMA-NOM-EFF	91	**PF**	85					
RATING	40C AMB-CONT							
CC	010A	**USABLE AT 208V**	39					
DE	6311	**ODE**	6208					
ENCL	OPEN	**SN**						

BALDOR A MEMBER OF THE ABB GROUP

Parts List

Part Number	Description	Quantity
SA123794	SA 09G506X661G1	1.000 EA
RA114261	RA 09G506X661G1	1.000 EA
09CB3002A19	CB MACH - 1.50 N.P.T. LEAD HOLE	1.000 EA
10XN2520K12	1/4-20 X.75 GRD 5	4.000 EA
HW1001A25	LOCKWASHER 1/4, ZINC PLT .493 OD, .255 I	4.000 EA
WD1000B17	KPA-8C BURNDY TERMINAL	1.000 EA
11XW1032G06	10-32 X .38, TAPTITE II, HEX WSHR SLTD U	1.000 EA
09AD2003	AIR DEFLECTOR, 309 OPEN P-BASE	1.000 EA
51XW0832A07	8-32 X .44, TAPTITE II, HEX WSHR SLTD SE	3.000 EA
09EP1203A01P4	FREP, MACH W/FINISH PAINT ONLY	1.000 EA
10XN3816K40	3/8-16 X 2.50 HEX HD CAP SCREW, GRADE 5	2.000 EA
HW1001A38	LOCKWASHER 3/8, ZINC PLT .688 OD, .382 I	2.000 EA
HW5100A08	W3118-035 WVY WSHR (WB)	1.000 EA
HW1001A25	LOCKWASHER 1/4, ZINC PLT .493 OD, .255 I	4.000 EA
10XN2520K36	1/4-20 X 2.25" HX HD SCRWGRADE 5, ZINC P	4.000 EA
HW4600B82	V-RING SLINGER 2.58 X 3.270 X 0.280	1.000 EA
10XN3118K68	5/16 18 X 4 1/4 HEX HEAD CAP	4.000 EA
HW1001A31	LOCKWASHER 5/16, ZINC PLT.591 OD, .319 I	4.000 EA
09EP1508A04	ENDPLATE, MACH W/311 BRG	1.000 EA
10XN3816K40	3/8-16 X 2.50 HEX HD CAP SCREW, GRADE 5	4.000 EA
HW1001A38	LOCKWASHER 3/8, ZINC PLT .688 OD, .382 I	4.000 EA
HW4600B40	V-RING SLINGER 2.000 X 2.680 X 0.280	1.000 EA
09FH1502A01	DRIP COVER, MACH	1.000 EA
HW3201A11	.38-16 EYEBOLT W/4.00 SHANK	2.000 EA

BALDOR
A MEMBER OF THE ABB GROUP

Parts List (continued)

Part Number	Description	Quantity
HW1000A38	WASHER, 3/8" FLAT, SAE Z/P	2.000 EA
HW1001A38	LOCKWASHER 3/8, ZINC PLT .688 OD, .382 I	2.000 EA
09CB3501SP	CONDUIT BOX LID FOR 09CB3001 & 09CB3002	1.000 EA
51XW2520A12	.25-20 X .75, TAPTITE II, HEX WSHR SLTD	2.000 EA
HW1001A31	LOCKWASHER 5/16, ZINC PLT.591 OD, .319 I	2.000 EA
HW2501E18	KEY, 1/4 SQ X 2.000	1.000 EA
LB1182	WARNING LABEL FOR MOTORS WITH EYENUTS	1.000 EA
LB5040	INSTRUCTION TAG, AC & DC	1.000 EA
HW4500A03	GREASE FITTING, .125 NPT 1610(ALEMITE) 8	1.000 EA
HW4500A17	317400 ALEMITE GREASE RELIEF	1.000 EA
HA4051A00	PLASTIC CAP FOR GREASE FITTING	1.000 EA
MJ1000A75	GREASE, POLYREX EM EXXON	0.080 LB
HW4500A03	GREASE FITTING, .125 NPT 1610(ALEMITE) 8	1.000 EA
HW4500A17	317400 ALEMITE GREASE RELIEF	1.000 EA
HA4051A00	PLASTIC CAP FOR GREASE FITTING	1.000 EA
MG1000G27	PAINT- S9282E CHARCOAL GREY	0.200 GA
85XU0407A04	#4-7 X 1/4 DRIVE PIN	2.000 EA
LB1125C01	STD (STOCK) CARTON LABEL BALDOR WITH FLA	4.000 EA
LC0005E02	SPL CONN.DIA./WARN.LABEL(LC0005/LB1119)	1.000 EA
NP1256L	ALUM, UL CSA CC, W/O THERMAL, LASER	1.000 EA
42PA1016	PACKAGING GROUP, 09 LARGE FACE	1.000 EA

BALDOR
A MEMBER OF THE ABB GROUP

09LYG506

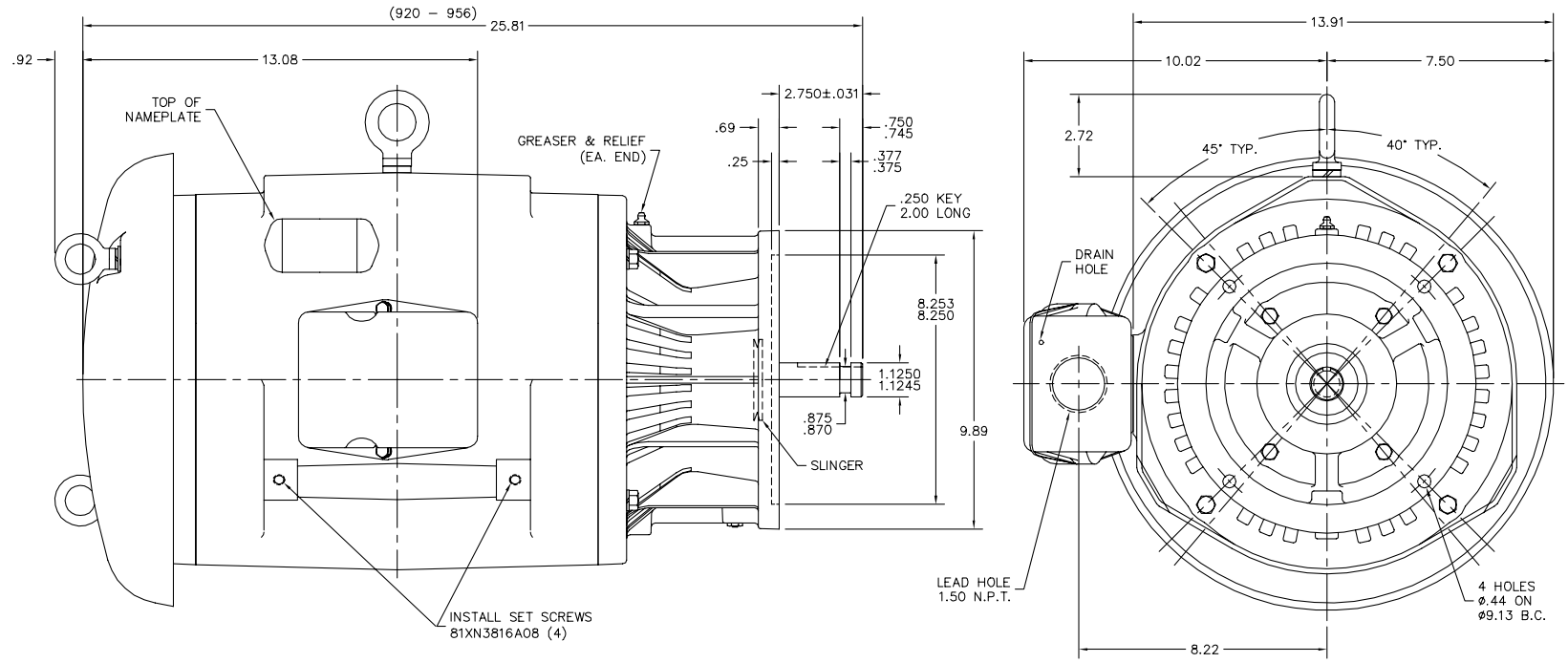

CUSTOMER IS RESPONSIBLE FOR DETERMINING THAT MOTOR PERFORMANCE IS SUITABLE IN THE APPLICATION.

REV. DESC: REMOVE GASKETS		
REV. LTR: A	VERSION: 01	TDR: 000000445681
FILE: \AAA\00119\689	REVISED: 16:28:19 02/11/2008	BY: ENGREH0
MTL: –		

BALDOR • DODGE • RELIANCE

STD VERT OPEN 254–6HP W/6311 BRG

SH 1 of 1

09LYG506

BALDOR A MEMBER OF THE ABB GROUP

CD0005

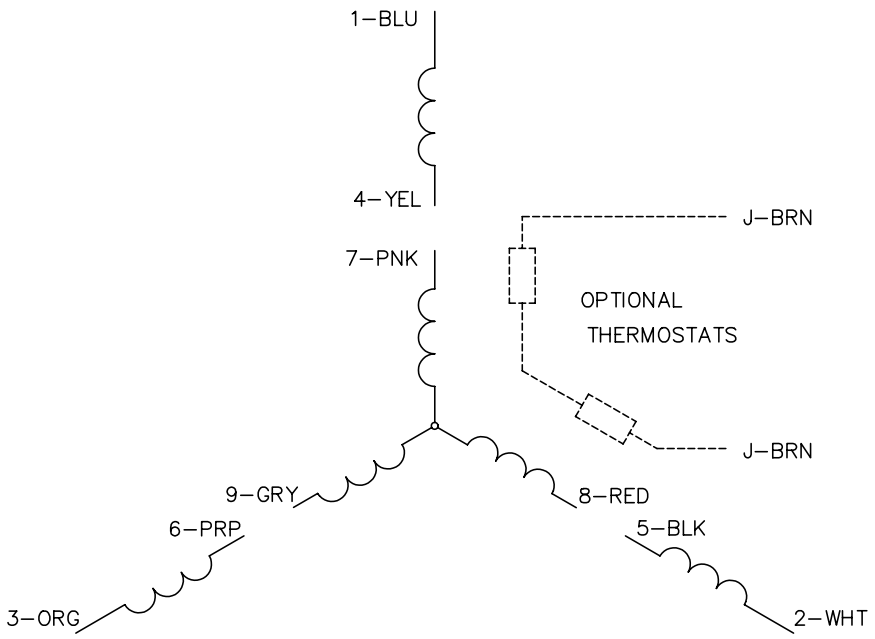

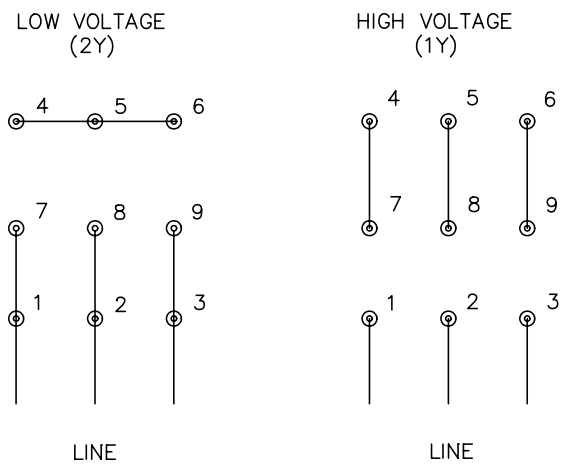

NOTES:

1. INTERCHANGE ANY TWO LINE LEADS TO REVERSE ROTATION.
2. OPTIONAL THERMOSTATS ARE PROVIDED WHEN SPECIFIED.
3. ACTUAL NUMBER OF INTERNAL PARALLEL CIRCUITS MAY BE A MULTIPLE OF THOSE SHOWN ABOVE.
4. LEAD COLORS ARE OPTIONAL. LEADS MUST ALWAYS BE NUMBERED AS SHOWN.

CD0005

REV. DESC: REVISE TO SHOW OPTIONAL COLORS			BALDOR ELECTRIC Co.
REV. LTR: E	BY: JLP	REVISED: 01/19/99 10:15	TDR: 0171435
CD0005		FILE: AAA00005140	MDL: –
		MTL: –	3PH, DV, 9 LEADS

BALDOR A MEMBER OF THE ABB GROUP