BALDOR
A MEMBER OF THE ABB GROUP

BALDOR • RELIANCE

Product Information Packet

ELECTRIC MOTOR WHOLESALE.COM

VHM2515T

20HP,1760RPM,3PH,60HZ,256HP,0936M,OPEN

Copyright © All product information within this document is subject to Baldor Electric Company copyright © protection, unless otherwise noted.

Part Detail							
Revision:	G	**Status:**	PRD/A	**Change #:**		**Proprietary:**	No
Type:	AC	**Prod. Type:**	0936M	**Elec. Spec:**	09WGY656	**CD Diagram:**	
Enclosure:	OPEN	**Mfg Plant:**		**Mech. Spec:**	09G625	**Layout:**	
Frame:	256HP	**Mounting:**	F1	**Poles:**	04	**Created Date:**	
Base:	N	**Rotation:**	R	**Insulation:**	F	**Eff. Date:**	01-03-2012
Leads:	9#12	**Literature:**		**Elec. Diagram:**		**Replaced By:**	

Nameplate NP1256L								
CAT.NO.	VHM2515T							
SPEC.	09G625Y656							
HP	20							
VOLTS	230/460							
AMP	50/25							
RPM	1760							
FRAME	256HP	**HZ**	60	**PH**	3			
SER.F.	1.15	**CODE**	G	**DES**	B	**CLASS**	F	
NEMA-NOM-EFF	91	**PF**	82					
RATING	40C AMB-CONT							
CC	010A	**USABLE AT 208V**	53					
DE	6312	**ODE**	6208					
ENCL	OPEN	**SN**						

BALDOR A MEMBER OF THE ABB GROUP

Parts List

Part Number	Description	Quantity
SA124443	SA 09G625Y656	1.000 EA
RA114864	RA 09G625Y656	1.000 EA
09CB3002A19	CB MACH - 1.50 N.P.T. LEAD HOLE	1.000 EA
10XN2520K12	1/4-20 X.75 GRD 5	4.000 EA
HW1001A25	LOCKWASHER 1/4, ZINC PLT .493 OD, .255 I	4.000 EA
WD1000B17	KPA-8C BURNDY TERMINAL	1.000 EA
11XW1032G06	10-32 X .38, TAPTITE II, HEX WSHR SLTD U	1.000 EA
09AD2003	AIR DEFLECTOR, 309 OPEN P-BASE	1.000 EA
51XW0832A07	8-32 X .44, TAPTITE II, HEX WSHR SLTD SE	3.000 EA
09EP1203A01P4	FREP, MACH W/FINISH PAINT ONLY	1.000 EA
10XN3816K40	3/8-16 X 2.50 HEX HD CAP SCREW, GRADE 5	2.000 EA
HW1001A38	LOCKWASHER 3/8, ZINC PLT .688 OD, .382 I	2.000 EA
HW5100A08	W3118-035 WVY WSHR (WB)	1.000 EA
10XN2520K36	1/4-20 X 2.25" HX HD SCRWGRADE 5, ZINC P	4.000 EA
HW1001A25	LOCKWASHER 1/4, ZINC PLT .493 OD, .255 I	4.000 EA
HW4600B61	SEAL,V70A FORSH/400700 CR	1.000 EA
10XN3118K68	5/16 18 X 4 1/4 HEX HEAD CAP	4.000 EA
HW1001A31	LOCKWASHER 5/16, ZINC PLT.591 OD, .319 I	4.000 EA
09EP1508A06	ENDPLATE, MACH W/312 BRG	1.000 EA
10XN3816K40	3/8-16 X 2.50 HEX HD CAP SCREW, GRADE 5	4.000 EA
HW1001A38	LOCKWASHER 3/8, ZINC PLT .688 OD, .382 I	4.000 EA
HW4600B41	V-RING SLINGER 2.125 X 2.880 X 0.280	1.000 EA
09FH1502A01	DRIP COVER, MACH	1.000 EA
HW3201A11	.38-16 EYEBOLT W/4.00 SHANK	2.000 EA

BALDOR
A MEMBER OF THE ABB GROUP

Parts List (continued)

Part Number	Description	Quantity
HW1000A38	WASHER, 3/8" FLAT, SAE Z/P	2.000 EA
HW1001A38	LOCKWASHER 3/8, ZINC PLT .688 OD, .382 I	2.000 EA
09CB3501SP	CONDUIT BOX LID FOR 09CB3001 & 09CB3002	1.000 EA
51XW2520A12	.25-20 X .75, TAPTITE II, HEX WSHR SLTD	2.000 EA
HW1001A31	LOCKWASHER 5/16, ZINC PLT.591 OD, .319 I	2.000 EA
HW2501E18	KEY, 1/4 SQ X 2.000	1.000 EA
LB1182	WARNING LABEL FOR MOTORS WITH EYENUTS	1.000 EA
LB5040	INSTRUCTION TAG, AC & DC	1.000 EA
HW4500A03	GREASE FITTING, .125 NPT 1610(ALEMITE) 8	1.000 EA
HW4500A17	317400 ALEMITE GREASE RELIEF	1.000 EA
HW4500A20	1/8NPT SL PIPE PLUG	1.000 EA
HA4051A00	PLASTIC CAP FOR GREASE FITTING	1.000 EA
MJ1000A75	GREASE, POLYREX EM EXXON	0.080 LB
HW4500A03	GREASE FITTING, .125 NPT 1610(ALEMITE) 8	1.000 EA
HW4500A17	317400 ALEMITE GREASE RELIEF	1.000 EA
HA4051A00	PLASTIC CAP FOR GREASE FITTING	1.000 EA
MG1000G27	PAINT- S9282E CHARCOAL GREY	0.200 GA
85XU0407A04	#4-7 X 1/4 DRIVE PIN	2.000 EA
LB1125A01SP	STOCK MTR CARTON LABEL LASER PRINTER	4.000 EA
LC0005E02	SPL CONN.DIA./WARN.LABEL(LC0005/LB1119)	1.000 EA
NP1256L	ALUM, UL CSA CC, W/O THERMAL, LASER	1.000 EA
42PA1016	PACKAGING GROUP, 09 LARGE FACE	1.000 EA
LB1357	ENERGY GUIDE LABEL (BOX LABEL)	1.000 SH

09LYG625

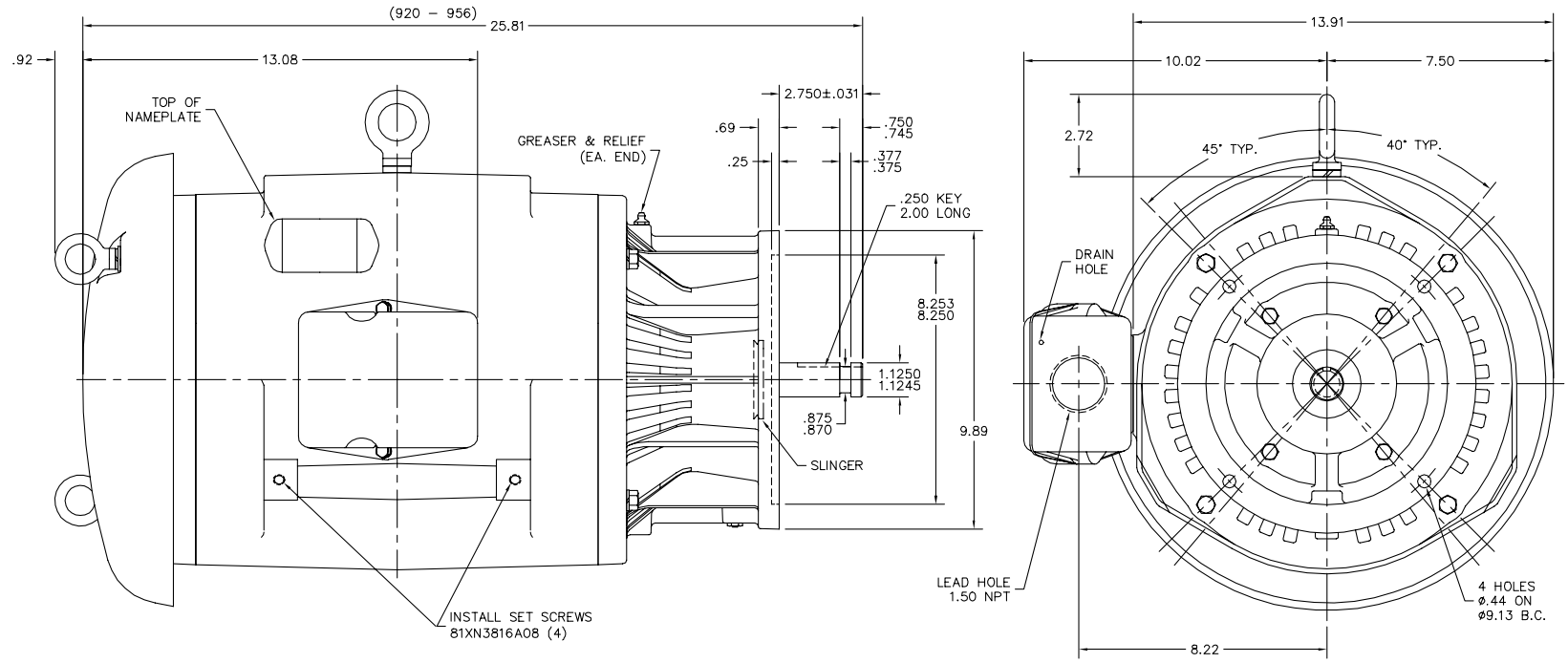

CUSTOMER IS RESPONSIBLE FOR DETERMINING THAT MOTOR PERFORMANCE IS SUITABLE IN THE APPLICATION.

REV. DESC: REMOVE GASKETS		
REV. LTR: A	VERSION: 01	TDR: 000000445681
FILE: \AAA\00123\814	REVISED: 09:00:45 02/12/2008	BY: ENGREH0
MTL: –		

BALDOR • DODGE • RELIANCE

STD VERT OPEN 254–6HP W/6312 BRG

SH 1 of 1

09LYG625

BALDOR A MEMBER OF THE ABB GROUP

CD0005

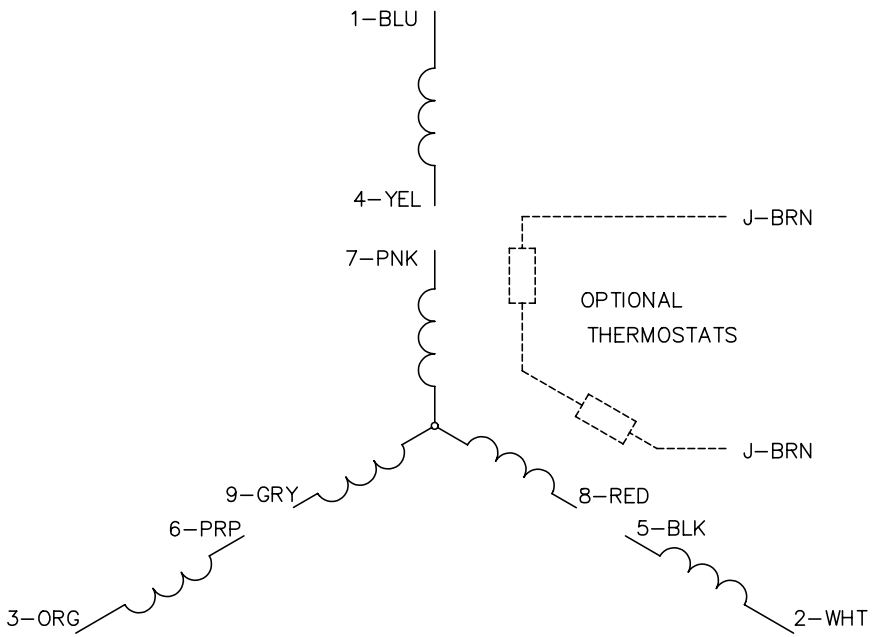

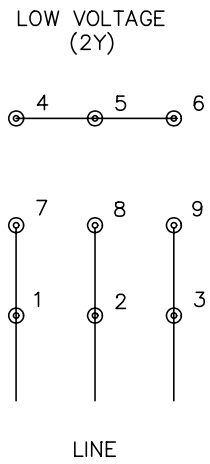

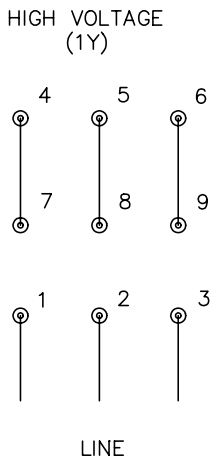

NOTES:

1. INTERCHANGE ANY TWO LINE LEADS TO REVERSE ROTATION.
2. OPTIONAL THERMOSTATS ARE PROVIDED WHEN SPECIFIED.
3. ACTUAL NUMBER OF INTERNAL PARALLEL CIRCUITS MAY BE A MULTIPLE OF THOSE SHOWN ABOVE.
4. LEAD COLORS ARE OPTIONAL. LEADS MUST ALWAYS BE NUMBERED AS SHOWN.

CD0005

REV. DESC: REVISE TO SHOW OPTIONAL COLORS			BALDOR ELECTRIC Co.
REV. LTR: E	BY: JLP	REVISED: 01/19/99 10:15	TDR: 0171435
CD0005		FILE: AAA00005140	MDL: –
		MTL: –	3PH, DV, 9 LEADS

BALDOR A MEMBER OF THE ABB GROUP