BALDOR
A MEMBER OF THE ABB GROUP

BALDOR • RELIANCE

Product Information Packet

ELECTRIC MOTOR WHOLESALE.COM

VHM2535T

30HP,1775RPM,3PH,60HZ,286HP,1046M,OPEN

Copyright © All product information within this document is subject to Baldor Electric Company copyright © protection, unless otherwise noted.

Part Detail

Revision:	J	**Status:**	PRD/A	**Change #:**		**Proprietary:**	No
Type:	AC	**Prod. Type:**	1046M	**Elec. Spec:**	10WGX411	**CD Diagram:**	
Enclosure:	OPEN	**Mfg Plant:**		**Mech. Spec:**	10F886	**Layout:**	
Frame:	286HP	**Mounting:**	F1	**Poles:**	04	**Created Date:**	
Base:	N	**Rotation:**	R	**Insulation:**	F	**Eff. Date:**	01-03-2012
Leads:	9#10	**Literature:**		**Elec. Diagram:**		**Replaced By:**	

Nameplate NP1256L

CAT.NO.	VHM2535T						
SPEC.	10F886X411G1						
HP	30						
VOLTS	230/460						
AMP	76.4/38.2						
RPM	1775						
FRAME	286HP	**HZ**	60	**PH**	3		
SER.F.	1.15	**CODE**	H	**DES**	B	**CLASS**	F
NEMA-NOM-EFF	92.4	**PF**	80				
RATING	40C AMB-CONT						
CC	010A	**USABLE AT 208V**	92				
DE	6312	**ODE**	6309				
ENCL	OPEN	**SN**					

BALDOR A MEMBER OF THE ABB GROUP

Parts List

Part Number	Description	Quantity
SA124441	SA 10F886X411G1	1.000 EA
RA114862	RA 10F886X411G1	1.000 EA
10CB3003A04	KO BOX, MACH W/2.00 NPT LD HL & #26 DRAI	1.000 EA
10XN3118K16	5/16-18 X 1" GRADE #5, STL, ZINC PLATE	4.000 EA
HW1001A31	LOCKWASHER 5/16, ZINC PLT.591 OD, .319 I	4.000 EA
WD1000B16	KPA-4C BURNDY TERMINAL	1.000 EA
51XF2520A08	SCREW, HEX SER SLT HD, ZN 1/4-20 X .50 L	1.000 EA
10EP1201A01	FREP, MACH W/309 BRG	1.000 EA
10AD2002	AIR DEFLECTOR, 310 OPEN P-BASE	1.000 EA
12XN1032A08	10-32X1/2 HEX HD SLTD	3.000 EA
HW1001A10	WASHER, #10 SPLT LK, ZN X	3.000 EA
HA4051A00	PLASTIC CAP FOR GREASE FITTING	1.000 EA
10XN3816K52	3/8-16 X 3-1/4 HEX HEAD CAP SCREW GRD 5	4.000 EA
HW1001A38	LOCKWASHER 3/8, ZINC PLT .688 OD, .382 I	4.000 EA
HW4600B41	V-RING SLINGER 2.125 X 2.880 X 0.280	1.000 EA
HW5100A11	W3917-042 WVY WSHR (WB)	1.000 EA
10XN3118K80	.31-18 X 5.0 HEX HD CAP SCREW, GRADE 5	4.000 EA
HW1001A31	LOCKWASHER 5/16, ZINC PLT.591 OD, .319 I	4.000 EA
10EP1507A02	ENDPLATE, MACH W/312 BRG	1.000 EA
HA4051A00	PLASTIC CAP FOR GREASE FITTING	1.000 EA
10XN3816K44	3/8-16 X 2.75 HEX HD CAP SCREW, GRADE 5	4.000 EA
HW1001A38	LOCKWASHER 3/8, ZINC PLT .688 OD, .382 I	4.000 EA
10FH1500A01	DRIP COVER, MACH	1.000 EA
HW3201A12	.50-13 EYEBOLT W/2.25 SHANK	2.000 EA

Parts List (continued)

Part Number	Description	Quantity
HW1001A50	LOCKWASHER 1/2, ZINC PLT,.879 OD, .509 I	2.000 EA
HW1000A50	1/2 SAE FLAT WASHERS	2.000 EA
10CB3501	CONDUIT BOX LID FOR 10CB3003, 10CB3004 &	1.000 EA
14GS1001	GASKET, CONDUIT BOX LID 314 FRAME	1.000 EA
10XN2520K16	1/4-20 X 1" HX HD SCRW GRADE 5, ZINC P	4.000 EA
HW1001A25	LOCKWASHER 1/4, ZINC PLT .493 OD, .255 I	4.000 EA
HW2501E11	KEY, 1/4 SQ X 1.125	1.000 EA
12GS1000SP	GASKET	1.000 EA
HW4500A03	GREASE FITTING, .125 NPT 1610(ALEMITE) 8	1.000 EA
HW4500A17	317400 ALEMITE GREASE RELIEF	1.000 EA
MJ1000A75	GREASE, POLYREX EM EXXON	0.130 LB
HW4500A03	GREASE FITTING, .125 NPT 1610(ALEMITE) 8	1.000 EA
HW4500A17	317400 ALEMITE GREASE RELIEF	1.000 EA
MG1000G27	PAINT- S9282E CHARCOAL GREY	0.200 GA
85XU0407A04	#4-7 X 1/4 DRIVE PIN	2.000 EA
LB1182	WARNING LABEL FOR MOTORS WITH EYENUTS	2.000 EA
LB5040	INSTRUCTION TAG, AC & DC	1.000 EA
LB1125A01SP	STOCK MTR CARTON LABEL LASER PRINTER	4.000 EA
LB1119	WARNING LABEL	1.000 EA
LC0181	CONNECTION LABEL	1.000 EA
NP1256L	ALUM, UL CSA CC, W/O THERMAL, LASER	1.000 EA
12PA1025	PKG.GP, BLANK OFFSET 310 S&L	1.000 EA
PK6538	2X4 X 11 SPACER	2.000 EA
LB1357	ENERGY GUIDE LABEL (BOX LABEL)	1.000 SH

Performance Data at 460V, 60Hz, 30.0HP (Typical performance - Not guaranteed values)							
General Characteristics							
Full Load Torque:	89.0 LB-FT			Start Configuration:		DOL	
No-Load Current:	17.4 Amps			Break-Down Torque:		323.0 LB-FT	
Line-line Res. @ 25°C.:	0.226 Ohms A Ph / 0.0 Ohms B Ph			Pull-Up Torque:		130.0 LB-FT	
Temp. Rise @ Rated Load:	29 C			Locked-Rotor Torque:		193.0 LB-FT	
Temp. Rise @ S.F. Load:	35 C			Starting Current:		260.0 Amps	
Load Characteristics							
% of Rated Load	25	50	75	100	125	150	S.F.
Power Factor:	42.0	63.0	74.0	79.0	82.0	82.0	81.0
Efficiency:	86.6	91.6	92.8	92.9	92.7	92.2	92.8
Speed:	1790.0	1785.0	1778.0	1772.0	1765.0	1758.0	1768.0
Line Amperes:	19.6	24.5	30.8	38.2	46.3	55.12	43.02

BALDOR A MEMBER OF THE ABB GROUP

Performance Graph at 460V, 60Hz, 30.0HP Typical performance - Not guaranteed values

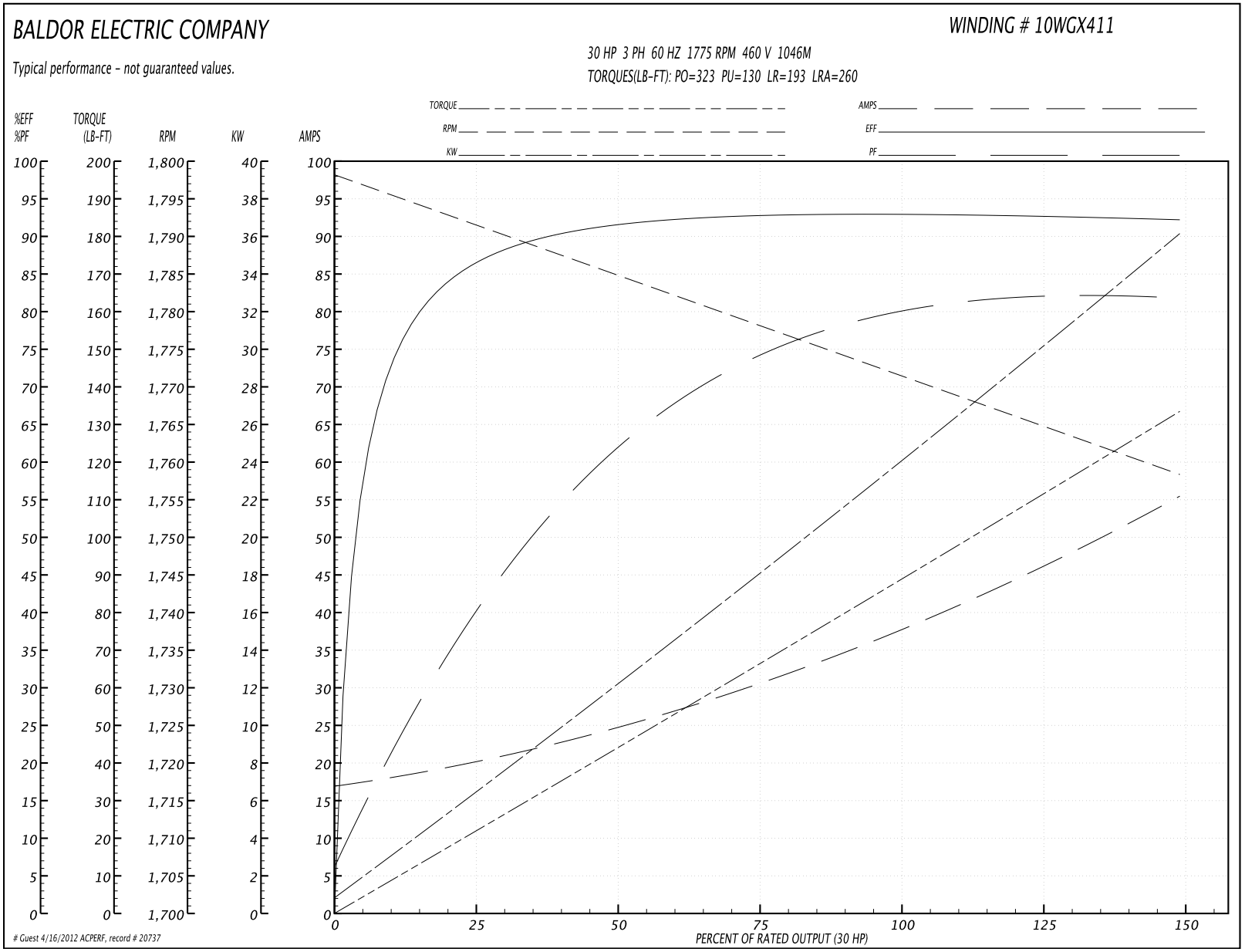

BALDOR
A MEMBER OF THE ABB GROUP

10LYF886

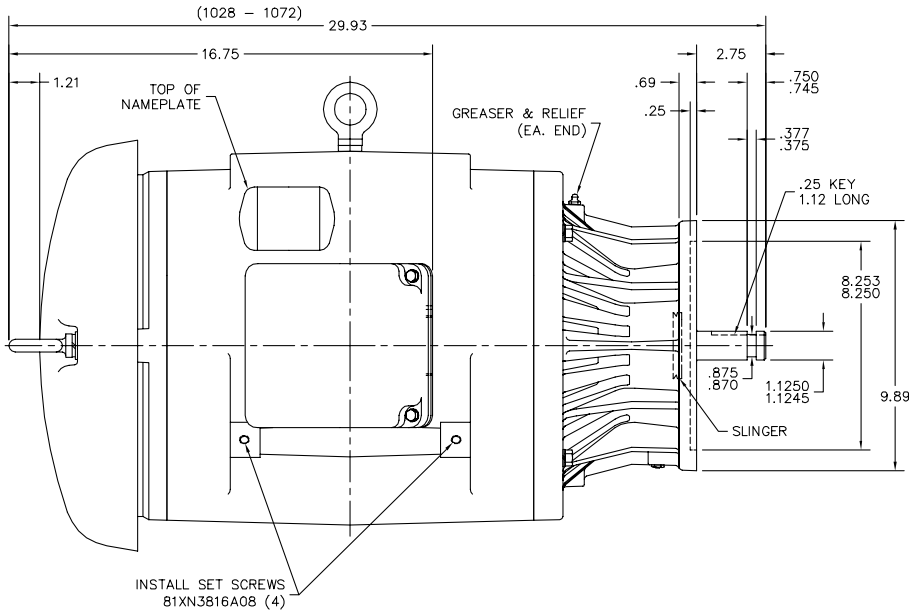

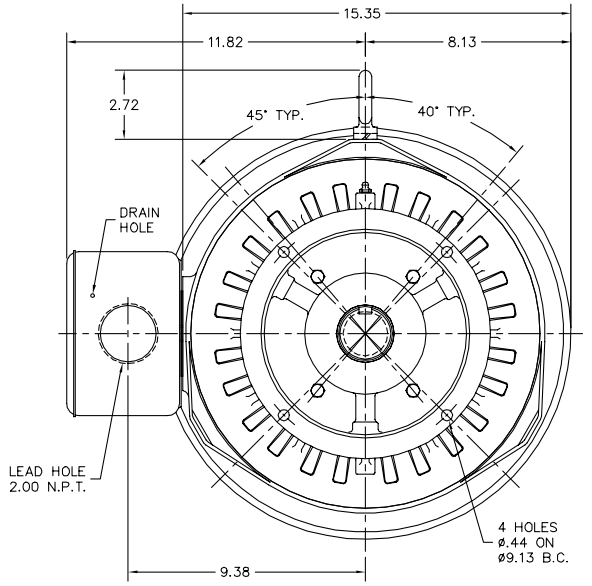

CUSTOMER IS RESPONSIBLE FOR DETERMINING THAT MOTOR PERFORMANCE IS SUITABLE IN THE APPLICATION.

REV. DESC: CHG .875/.874 TO .875/.870		
REV. LTR: B	VERSION: 02	TDR: 000000406020
FILE: \AAA\00123\482	REVISED: 14:20:44 08/23/2006	BY: ENROBRO
MTL: –		

BALDOR ELECTRIC Co.

STD VERT OPEN 284–6HP W/312 BRG

10LYF886

BALDOR A MEMBER OF THE ABB GROUP

CD0180

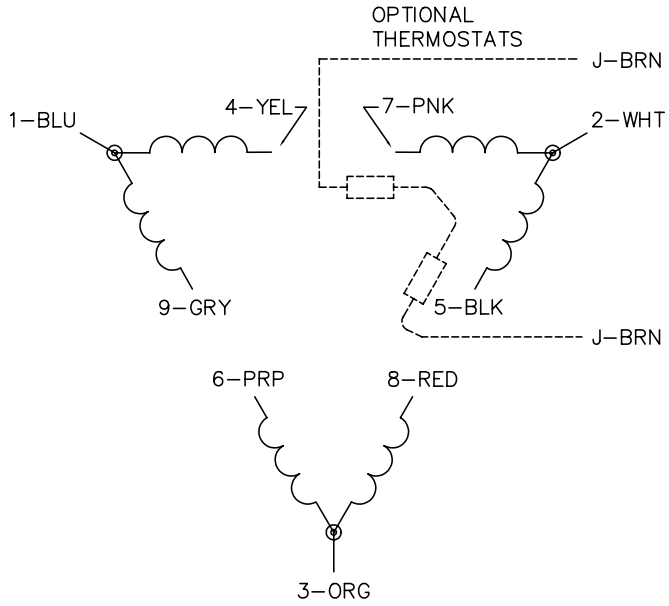

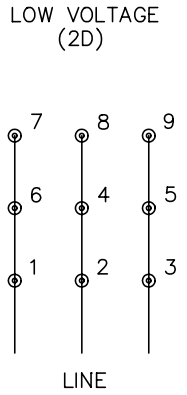

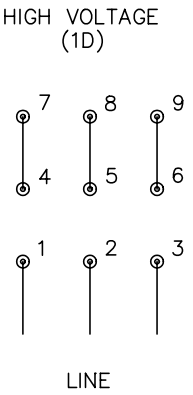

NOTES:

1. INTERCHANGE ANY TWO LINE LEADS TO REVERSE ROTATION.
2. OPTIONAL THERMOSTATS ARE PROVIDED WHEN SPECIFIED.
3. ACTUAL NUMBER OF INTERNAL PARALLEL CIRCUITS MAY BE A MULTIPLE OF THOSE SHOWN ABOVE.
4. LEAD COLORS ARE OPTIONAL. LEADS MUST ALWAYS BE NUMBERED AS SHOWN.

CD0180

REV. DESC: REVISE TO SHOW OPTIONAL COLORS			BALDOR ELECTRIC Co.
REV. LTR: C	BY: JLP	REVISED: 01/21/99 2:28	TDR: 0171435
CD0180		FILE: AAA00005148	MDL: –
		MTL: –	3PH, DV, 9 LEADS, DELTA CONNECTION

BALDOR
A MEMBER OF THE ABB GROUP