BALDOR
A MEMBER OF THE ABB GROUP

BALDOR • RELIANCE

Product Information Packet

ELECTRIC MOTOR WHOLESALE.COM

VHM3219T

7.5HP,3450RPM,3PH,60HZ,184HP,0640M,ODP

Copyright © All product information within this document is subject to Baldor Electric Company copyright © protection, unless otherwise noted.

Part Detail

Revision:	P	**Status:**	PRD/A	**Change #:**		**Proprietary:**	No
Type:	AC	**Prod. Type:**	0640M	**Elec. Spec:**	06WGW803	**CD Diagram:**	
Enclosure:	ODP	**Mfg Plant:**		**Mech. Spec:**	06F867	**Layout:**	
Frame:	184HP	**Mounting:**	W6	**Poles:**	02	**Created Date:**	
Base:	N	**Rotation:**	R	**Insulation:**	F	**Eff. Date:**	02-21-2012
Leads:	9#16	**Literature:**		**Elec. Diagram:**		**Replaced By:**	

Nameplate NP1261L

CAT.NO.	VHM3219T						
SPEC.	06F867W803H1						
HP	7.5						
VOLTS	208-230/460						
AMP	19-17/8.5						
RPM	3450						
FRAME	184HP	**HZ**	60	**PH**	3		
SER.F.	1.15	**CODE**	J	**DES**	A	**CLASS**	F
NEMA-NOM-EFF	87.5	**PF**	95				
RATING	40C AMB-CONT						
CC	010A	**USABLE AT 208V**	19				
DE	6308	**ODE**	6205				
ENCL	ODP	**SN**					

BALDOR A MEMBER OF THE ABB GROUP

Parts List

Part Number	Description	Quantity
SA124017	SA 06F867W803H1	1.000 EA
RA114466	RA 06F867W803H1	1.000 EA
S/P101-000-000	EPACT PROCEDURES-FS PLANT-POLYREX EM, NO	1.000 EA
HW3201A05	3/8-16 EYEBOLT	1.000 EA
06CB3000B01	SPL KO BOX MACH. W/.75 N.P.T.	1.000 EA
06GS1000	GASKET,CONDUIT BOX	1.000 EA
51XW2520A12	.25-20 X .75, TAPTITE II, HEX WSHR SLTD	4.000 EA
WD1000B17	KPA-8C BURNDY TERMINAL	1.000 EA
10XN2520G06	1/4 20X3/8 HX HD CAP, GREEN	1.000 EA
HW1001A25	LOCKWASHER 1/4, ZINC PLT .493 OD, .255 I	1.000 EA
06EP1200A01	FREP MACH OPEN	1.000 EA
10XN2520A44	1/4 -20 X 2 3/4 HS WS SL SR	4.000 EA
HW1001A25	LOCKWASHER 1/4, ZINC PLT .493 OD, .255 I	4.000 EA
HW4500A03	GREASE FITTING, .125 NPT 1610(ALEMITE) 8	1.000 EA
HW4500A17	317400 ALEMITE GREASE RELIEF	1.000 EA
06AD2000G	AIR DEFLECTOR, 306 OPEN, GREY EPOXY POWD	1.000 EA
51XT0832A08	8-32 X 1/2 TY23 HXWS SLDSR	3.000 EA
HW1001A08	WASHER, #8 SPLT LK, ZN	3.000 EA
HW5100A05	WVY WSHR F/205 & 304 BRGS	1.000 EA
HW4600A11	19969 CRWH1 SEAL	1.000 EA
10XN2520A56	1/4-20X 3 1/2 HEX HD CAP X	2.000 EA
HW1001A25	LOCKWASHER 1/4, ZINC PLT .493 OD, .255 I	2.000 EA
06EP1503A02	SPL PU E.P. MACH, W/6308 BRG.	1.000 EA
HW4600A47	CR#13535--NAT#472354 OR TRANSCOM	1.000 EA

BALDOR
A MEMBER OF THE ABB GROUP

Parts List (continued)

Part Number	Description	Quantity
10XN2520A36	1/4-20X 2 1/4 HEX HD X	4.000 EA
HW1001A25	LOCKWASHER 1/4, ZINC PLT .493 OD, .255 I	4.000 EA
HW4500A03	GREASE FITTING, .125 NPT 1610(ALEMITE) 8	1.000 EA
HW4500A17	317400 ALEMITE GREASE RELIEF	1.000 EA
HW4500A20	1/8NPT SL PIPE PLUG	1.000 EA
06CB3500	CONDUIT BOX LID - ALUMINUM DIE CAST	1.000 EA
06GS1001	GASKET, CONDUIT BOX LID	1.000 EA
51XN2520A12	SCREW, HEX WS SLT, ZN	2.000 EA
HW1001A25	LOCKWASHER 1/4, ZINC PLT .493 OD, .255 I	2.000 EA
06FH1500A01	DRIP COVER FOR 306 OPEN	1.000 EA
HW3201A15	.38-16 EYEBOLT W/1.25 SHANK	2.000 EA
HW1000A38	WASHER, 3/8" FLAT, SAE Z/P	2.000 EA
HW4600C51	31X39X7.5MM FACE SEAL FOR 1.375 DIA. SH	1.000 EA
HW2501E16	KEY, 1/4 SQ X 1.750	1.000 EA
HA7000A02	KEY RETAINER RING, 1 1/8 DIA, 1 3/8 DIA	1.000 EA
LB1386	WARNING LABEL FOR MOTORS WITH EYENUTS	1.000 EA
85XU0407S04	4X1/4 U DRIVE PIN STAINLESS	2.000 EA
LB1115	LABEL,LIFTING DEVICE	1.000 EA
MJ1000A75	GREASE, POLYREX EM EXXON	0.050 LB
MG1025N19	PAINT, 778.50 WILKO, RELIANCE ELEC GREEN	0.028 GA
LB1125C04	STD-E (STOCK CTN LABEL STD-E WITH FLAG)	1.000 EA
LC0005E01	CONN.DIA./WARNING LABEL (LC0005/LB1119)	1.000 EA
NP1261L	SS, UL CSA CC, W/O THERMAL, LASER	1.000 EA
37PA1052	PACKAGING GROUP, 150 LB MTR 2 X 4 RUNNER	1.000 EA

Parts List (continued)

Part Number	Description	Quantity
PK3082	STYROFOAM CRADLE	1.000 EA

BALDOR
A MEMBER OF THE ABB GROUP

06LYF867

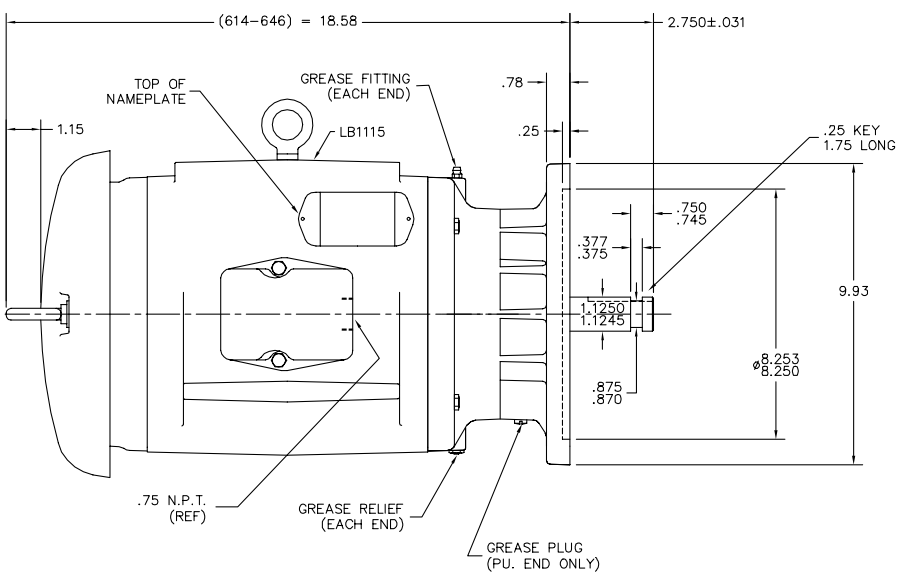

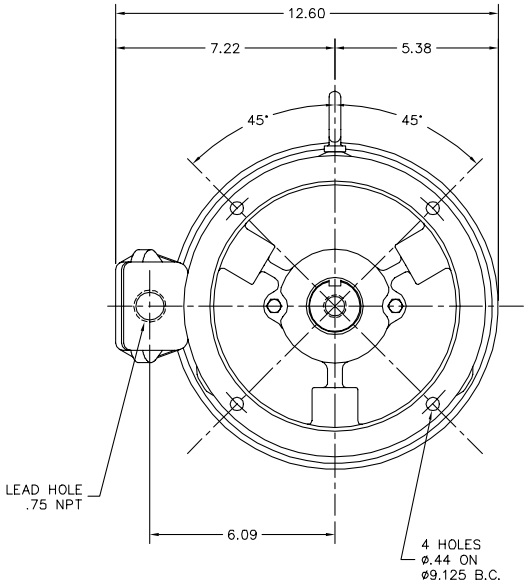

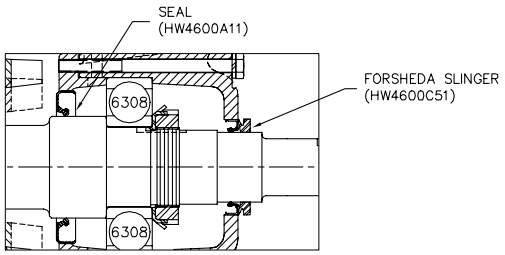

PULLEY DETAIL

CUSTOMER IS RESPONSIBLE FOR DETERMINING THAT BALDOR'S PRODUCT WILL PERFORM SUITABLY IN THE INTENDED APPLICATION.

REV. DESC: ADD LEADER FOR LB1115		
REV. LTR: B	VERSION: 02	TDR: 000000585369
FILE: \AAA\00123\354	REVISED: 10:00:22 03/23/2011	BY: ENALEM0
MTL: –		

BALDOR

VER OPEN 182-4HP WP (14-1) 308 PU BRG

SH 1 of 1

06LYF867

BALDOR A MEMBER OF THE ABB GROUP

CD0005

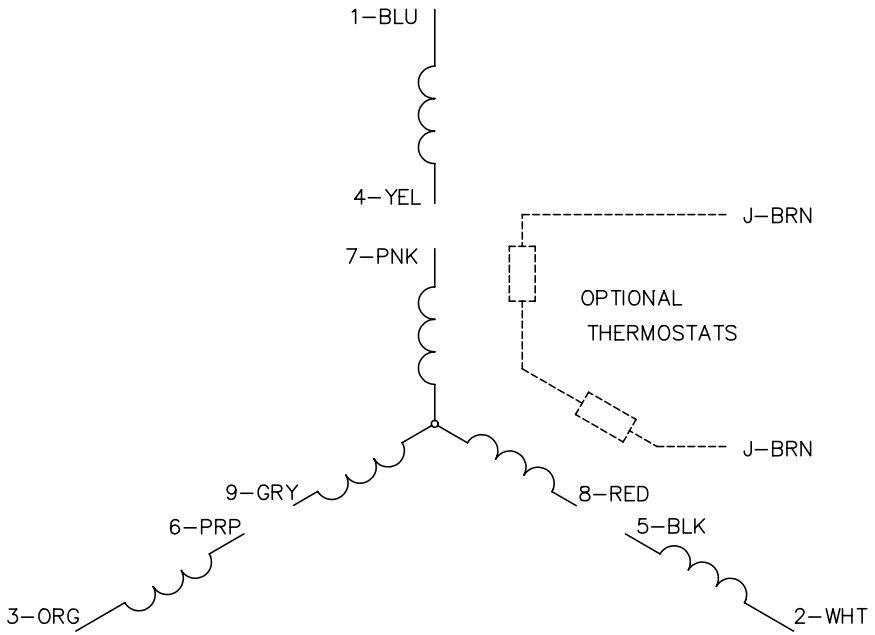

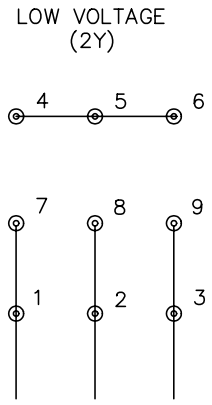

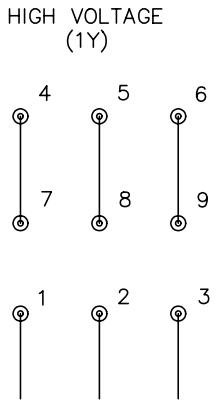

NOTES:

1. INTERCHANGE ANY TWO LINE LEADS TO REVERSE ROTATION.
2. OPTIONAL THERMOSTATS ARE PROVIDED WHEN SPECIFIED.
3. ACTUAL NUMBER OF INTERNAL PARALLEL CIRCUITS MAY BE A MULTIPLE OF THOSE SHOWN ABOVE.
4. LEAD COLORS ARE OPTIONAL. LEADS MUST ALWAYS BE NUMBERED AS SHOWN.

CD0005

REV. DESC: REVISE TO SHOW OPTIONAL COLORS			BALDOR ELECTRIC Co.
REV. LTR: E	BY: JLP	REVISED: 01/19/99 10:15	TDR: 0171435
CD0005		FILE: AAA00005140	MDL: –
		MTL: –	3PH, DV, 9 LEADS

BALDOR A MEMBER OF THE ABB GROUP