BALDOR
A MEMBER OF THE ABB GROUP

BALDOR • RELIANCE

Product Information Packet

ELECTRIC MOTOR WHOLESALE.COM

VHM3312T

10HP,3450RPM,3PH,60HZ,213HP,0725M,ODP,F1

Copyright © All product information within this document is subject to Baldor Electric Company copyright © protection, unless otherwise noted.

Part Detail							
Revision:	E	**Status:**	PRD/A	**Change #:**		**Proprietary:**	No
Type:	AC	**Prod. Type:**	0725M	**Elec. Spec:**	07WGX482	**CD Diagram:**	
Enclosure:	ODP	**Mfg Plant:**		**Mech. Spec:**	07K218	**Layout:**	
Frame:	213HP	**Mounting:**	F1	**Poles:**	02	**Created Date:**	
Base:	N	**Rotation:**	R	**Insulation:**	F	**Eff. Date:**	02-13-2012
Leads:	9#14	**Literature:**		**Elec. Diagram:**		**Replaced By:**	

Nameplate NP1261L								
CAT.NO.	VHM3312T							
SPEC.	07K218X482H1							
HP	10							
VOLTS	208-230/460							
AMP	25.6-23.2/11.6							
RPM	3450							
FRAME	213HP	**HZ**	60	**PH**	3			
SER.F.	1.15	**CODE**	H	**DES**	B	**CLASS**	F	
NEMA-NOM-EFF	88.5	**PF**	90					
RATING	40C AMB-CONT							
CC	010A	**USABLE AT 208V**	25.6					
DE	6309	**ODE**	6206					
ENCL	ODP	**SN**						

BALDOR A MEMBER OF THE ABB GROUP

Parts List

Part Number	Description	Quantity
SA124237	SA 07K218X482H1	1.000 EA
RA114672	RA 07K218X482H1	1.000 EA
S/P101-000-000	EPACT PROCEDURES-FS PLANT-POLYREX EM, NO	1.000 EA
HW3201A05	3/8-16 EYEBOLT	1.000 EA
09CB3002A19	CB MACH - 1.50 N.P.T. LEAD HOLE	1.000 EA
09GS1000SP	GASKET-CONDUIT BOX, 1/16 THICK LEXIDE	1.000 EA
10XN2520A12	O1/4-20X 3/4 HEX HEAD CAP	4.000 EA
HW1001A25	LOCKWASHER 1/4, ZINC PLT .493 OD, .255 I	4.000 EA
HW2501E17	.250 SQUARE X 1.875 LONG LOW CARBON STEE	1.000 EA
10XN2520G06	1/4 20X3/8 HX HD CAP, GREEN	1.000 EA
HW1001A25	LOCKWASHER 1/4, ZINC PLT .493 OD, .255 I	1.000 EA
WD1000B16	KPA-4C BURNDY TERMINAL	1.000 EA
07EP1200A01	FRONT END PLATE,MACH	1.000 EA
07AD2000	AIR DEFLECTOR, 307 OPEN P-BASE	1.000 EA
51XT0832A08	8-32 X 1/2 TY23 HXWS SLDSR	3.000 EA
HW1001A08	WASHER, #8 SPLT LK, ZN	3.000 EA
10XN3816A60	3/8-16 X 3-3/4 HEX HD CAPSCREW,GRADE 2,Z	2.000 EA
HW1001A38	LOCKWASHER 3/8, ZINC PLT .688 OD, .382 I	2.000 EA
HW4500A03	GREASE FITTING, .125 NPT 1610(ALEMITE) 8	1.000 EA
HW4500A17	317400 ALEMITE GREASE RELIEF	1.000 EA
HW5100A06	W2420-025 WVY WSHR (WB)	1.000 EA
07EP1505A02	SPL PU E.P. MACH, W/6309 BRG.	1.000 EA
HW4600B53	SEAL 1.688 X 2.275 X 0.312 SINGLE LIP DB	1.000 EA
HW4500A03	GREASE FITTING, .125 NPT 1610(ALEMITE) 8	1.000 EA

BALDOR
A MEMBER OF THE ABB GROUP

Parts List (continued)

Part Number	Description	Quantity
HW4500A17	317400 ALEMITE GREASE RELIEF	1.000 EA
HW4500A20	1/8NPT SL PIPE PLUG	1.000 EA
10XN2520A56	1/4-20X 3 1/2 HEX HD CAP X	2.000 EA
HW1001A25	LOCKWASHER 1/4, ZINC PLT .493 OD, .255 I	2.000 EA
HW4600B44SP	V-RING SLINGER 1.500 X 2.290 X 0.280	1.000 EA
07FH1500A01	DRIP COVER 307 OPEN P-BASE MTRS	1.000 EA
HW3201A10	.38-16 EYEBOLT W/4.50 SHANK	2.000 EA
HW1000A38	WASHER, 3/8" FLAT, SAE Z/P	2.000 EA
10XN3816A44	3/8-16 X 2 3/4 HEX HD CAP SCREW	4.000 EA
HW1001A38	LOCKWASHER 3/8, ZINC PLT .688 OD, .382 I	4.000 EA
09CB3501SP	CONDUIT BOX LID FOR 09CB3001 & 09CB3002	1.000 EA
09GS1013SP	09 GS FOR 09CB3501 LID - LEXIDE	1.000 EA
51XW2520A12	.25-20 X .75, TAPTITE II, HEX WSHR SLTD	2.000 EA
HW1001A25	LOCKWASHER 1/4, ZINC PLT .493 OD, .255 I	2.000 EA
HA7000A02	KEY RETAINER RING, 1 1/8 DIA, 1 3/8 DIA	1.000 EA
85XU0407S04	4X1/4 U DRIVE PIN STAINLESS	2.000 EA
LB1386	WARNING LABEL FOR MOTORS WITH EYENUTS	1.000 EA
MJ1000A75	GREASE, POLYREX EM EXXON	0.050 LB
MG1025N19	PAINT, 778.50 WILKO, RELIANCE ELEC GREEN	0.036 GA
LB1125C04	STD-E (STOCK CTN LABEL STD-E WITH FLAG)	1.000 EA
LC0005E01	CONN.DIA./WARNING LABEL (LC0005/LB1119)	1.000 EA
NP1261L	SS, UL CSA CC, W/O THERMAL, LASER	1.000 EA
07PA1011	PKG GRP, 07 CAST IRON PK1181	1.000 EA
10XL3808A28	3/8 X 1 3/4" LAG SCREW	2.000 EA

BALDOR
A MEMBER OF THE ABB GROUP

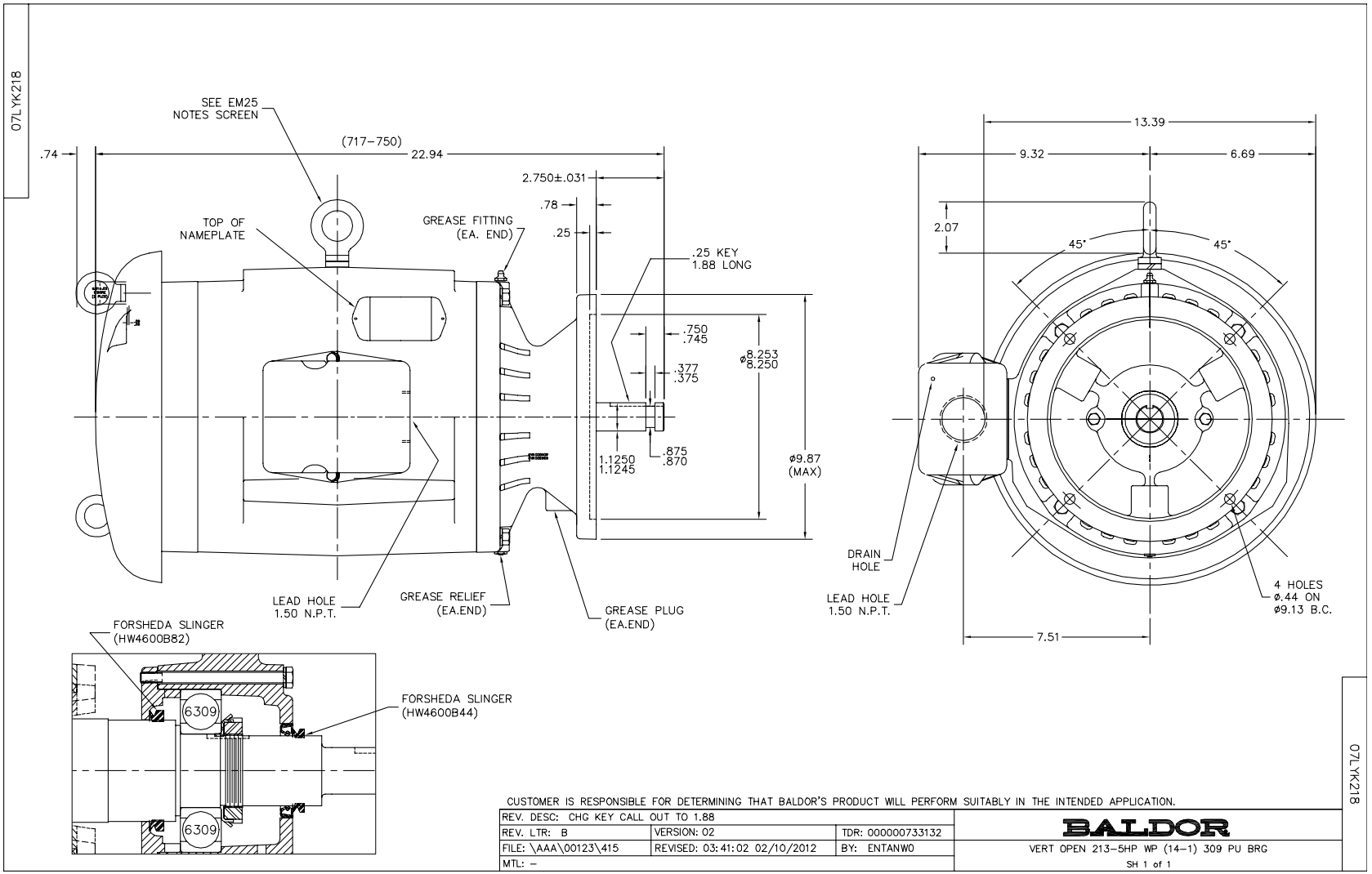

CUSTOMER IS RESPONSIBLE FOR DETERMINING THAT BALDOR'S PRODUCT WILL PERFORM SUITABLY IN THE INTENDED APPLICATION.

REV. DESC: CHG KEY CALL OUT TO 1.88		
REV. LTR: B	VERSION: 02	TDR: 000000733132
FILE: \AAA\00123\415	REVISED: 03:41:02 02/10/2012	BY: ENTANWO
MTL: –		

BALDOR
VERT OPEN 213-5HP WP (14-1) 309 PU BRG
SH 1 of 1

BALDOR
A MEMBER OF THE ABB GROUP

CD0005

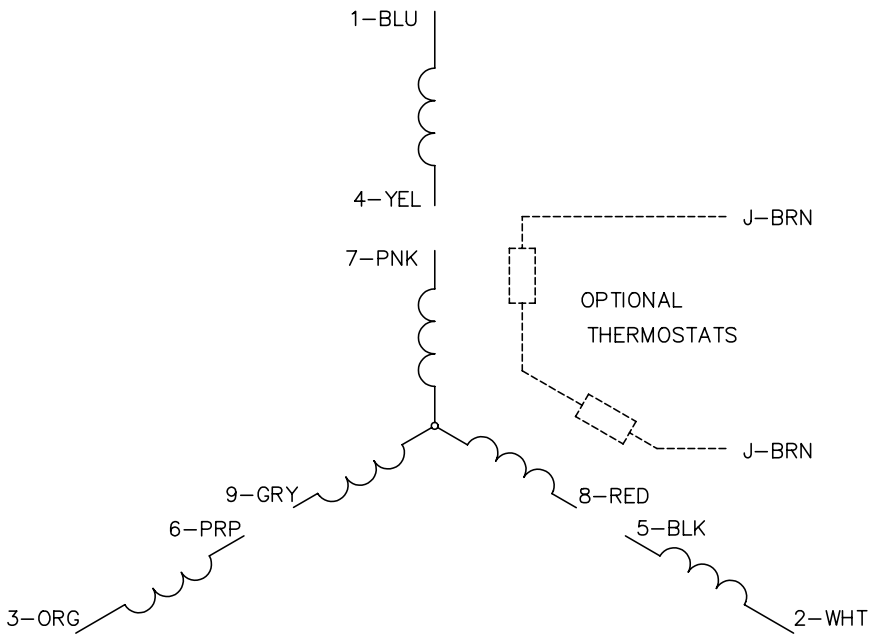

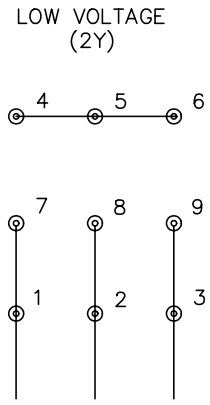

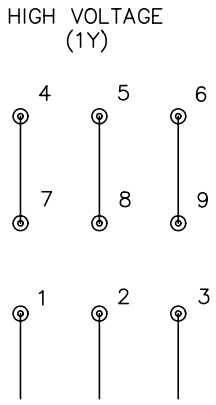

NOTES:

1. INTERCHANGE ANY TWO LINE LEADS TO REVERSE ROTATION.
2. OPTIONAL THERMOSTATS ARE PROVIDED WHEN SPECIFIED.
3. ACTUAL NUMBER OF INTERNAL PARALLEL CIRCUITS MAY BE A MULTIPLE OF THOSE SHOWN ABOVE.
4. LEAD COLORS ARE OPTIONAL. LEADS MUST ALWAYS BE NUMBERED AS SHOWN.

CD0005

REV. DESC: REVISE TO SHOW OPTIONAL COLORS			BALDOR ELECTRIC Co.
REV. LTR: E	BY: JLP	REVISED: 01/19/99 10:15	TDR: 0171435
CD0005		FILE: AAA00005140	MDL: –
		MTL: –	3PH, DV, 9 LEADS

BALDOR A MEMBER OF THE ABB GROUP