169564-60

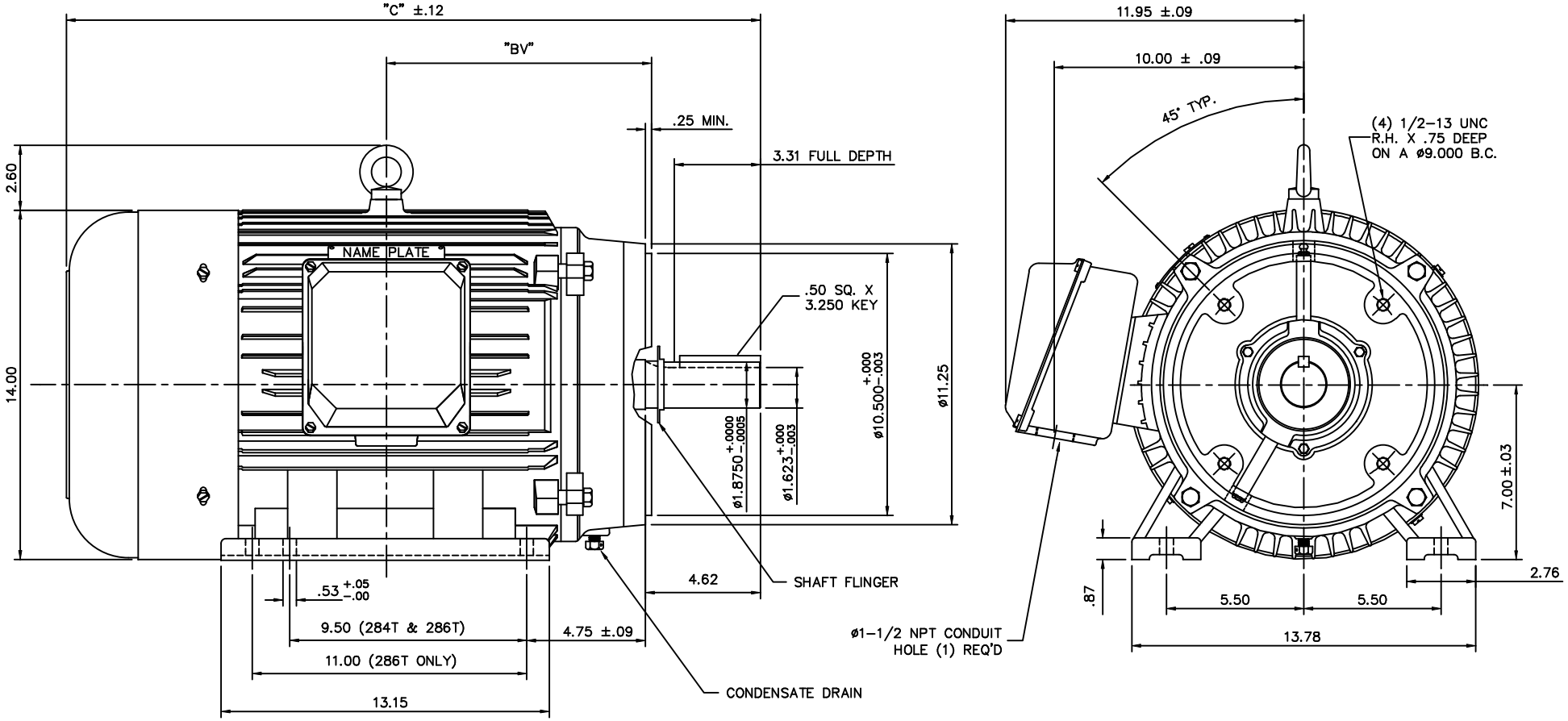

NOTE: 286T HAS 6 MTG. HOLES,
USING 254T AND 256T LOCATIONS

FRAME DESIGN	"C"	"BV"
284T	26.26	9.65
286T	27.83	10.43

NO.	REVISION	BY & DATE	CH'K'D.
01	REDRAWN TO CURRENT CAD STANDARDS	CJK 9/24/01	

THIS DRAWING IN DESIGN AND DETAIL IS OUR PROPERTY AND MUST NOT BE USED EXCEPT IN CONNECTION WITH OUR WORK ALL RIGHTS OF DESIGN AND INVENTION ARE RESERVED
THIS IS AN ELECTRONICALLY GENERATED DOCUMENT – DO NOT SCALE THIS PRINT

TOLERANCES UNLESS OTHERWISE SPECIFIED		
DEC.	INCHES	METRIC
.X	±.1	±2.5
.XX	±.03	±.76
.XXX	±.005	±.127
.XXXX	±.0005	±.0127
FRACTIONS	±1/64	
ANGLES	±1/2°	

LEESON ELECTRIC CORPORATION

DRAWN LEM 09/28/99	TITLE OUTLINE-280T FARME, RIGID TEFC "C"-FACE, NEW CONDUIT BOX
APPR. ADS 09/11/99	
R.F.P.	MAT'L. CAST IRON
SCALE 1=4	
REF.	FINISH
FMF	REV. 01 / DRAWING NO. 169564-60